CONSTRUCTION PLANS FOR:

CENTRAL BEEF IND., LLC
SUMTER COUNTY, FLORIDA
PROPOSED SPRAY FIELD

I N D E X

C1 SITE PLAN (SHT 1 OF 2)

C2 SITE PLAN (SHT 2 OF 2)

C3 PIPING PLAN (SHT 1 OF 2)

C4 PIPING PLAN (SHT 2 OF 2)

C5 STORMWATER POLLUTION PREVENTION PLAN (SHT 1 OF 2)

C6 STORMWATER POLLUTION PREVENTION PLAN (SHT 2 OF 2)

P1

M1 WASTEWATER PONDS PUMP STATION

sunshine state
ONE CALL of florida 811
DIAL 811
Local No. 1-800-432-4770
Notification # _____
Call 48 hours before you dig.

State law requires excavators to call 811 before digging per the 'Underground Facility Damage Prevention and Safety Act' Chapter 556, Florida Statutes. Failure to call can result in fines from $250 to $5,000.

engineers – architects – surveyors – scientists

chastain skillman incorporated

Lakeland
Sebring
Tampa
Tallahassee

C.A. No. 262

Design Office : 4705 Old Highway 37, P.O. Box 5710 Lakeland, Florida 33807-5710 (863) 646-1402
Corporate Headquarters : 4705 Old Hwy 37, P.O. Box 5710, Lakeland, FL 33807-5710 (863) 646-1402

P1 ISSUED FOR PERMITTING

ENGINEER: STEVEN A. DUTCH, P.E.
REG. NO. 39118
C.S.I. JOB NO. 896905

CENTRAL BEEF IND., LLC
SUMTER COUNTY, FLORIDA
PROPOSED SPRAY FIELDS

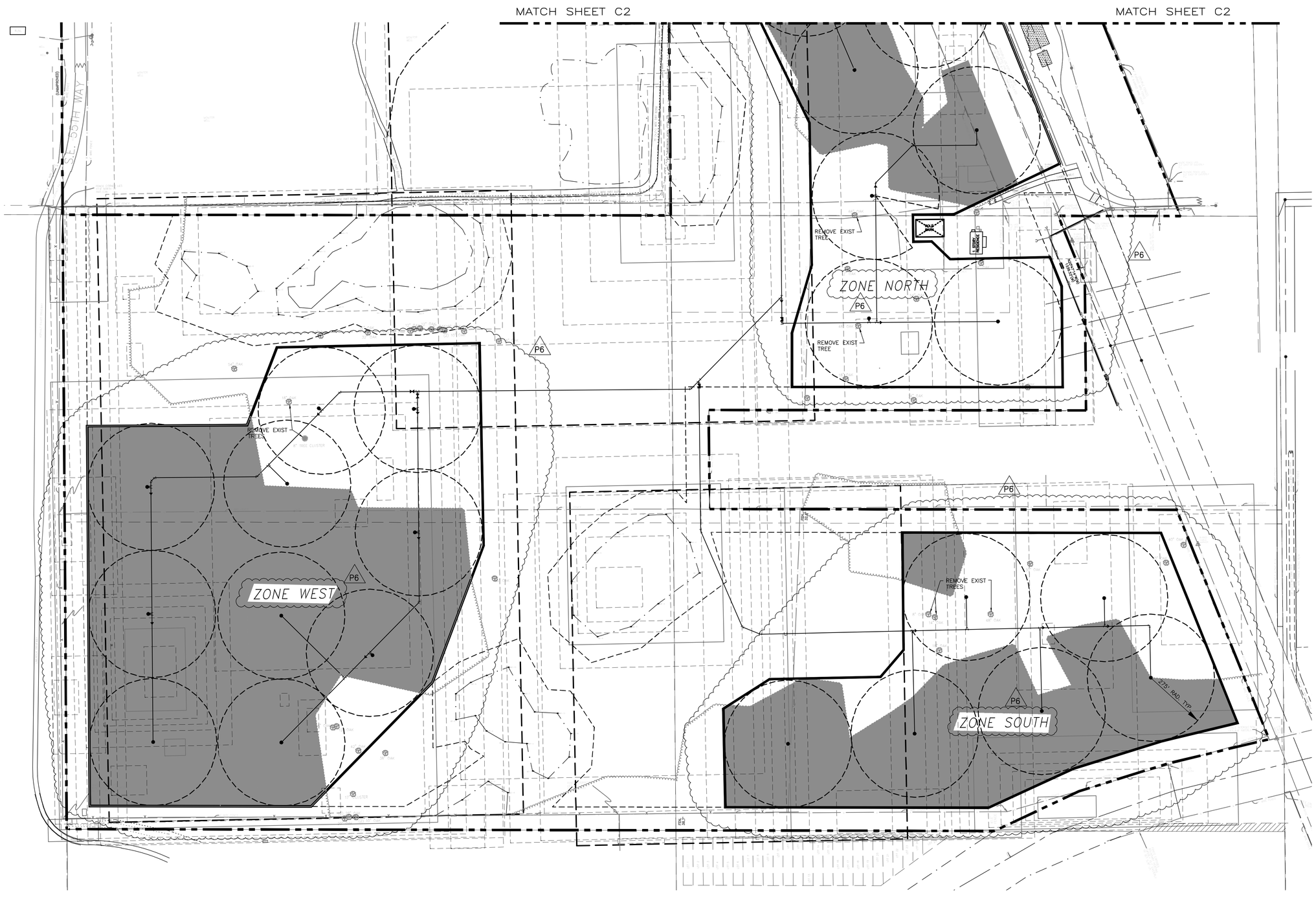

TREE COUNT ZONE TABLE				
ZONE	6"–10" TREES	10"–20" TREES	20"–30" TREES	30" TREES
WEST	79	111	45	40
SOUTH	39	32	15	41
NORTH	62	47	23	35
TOTAL	180	190	83	115

TREE TOTAL: 569

P6

GRAPHIC SCALE

(IN FEET)
1 inch = 100 ft.

P6

ZONE COVERAGE

ZONE NORTH = 14.72 AC

ZONE SOUTH = 10.25 AC

ZONE WEST = 16.11 AC

TOTAL = 41.08 AC

engineers – architects – surveyors – scientists
chastain skillman incorporated
Lakeland Sebring Tampa Tallahassee
Corporate headquarters: 4702 Old Ella Rd. P.O. Box 2228 Lakeland, FL 33805-2228 (863) 646-1021
C.A. No. 262

REVISION NO.	REVISION DATE	REVISION DESCRIPTION
P6	01/26/10	REV. PER FDEP CONSTRUCTION PERMIT
P5	12/22/09	REV. PER COMMENT
P4	12/10/09	REV. PER COMMENT
P3	08/04/09	ISSUED FOR REVIEW PER 2ND R.A.I.
P2	07/28/09	ISSUED FOR REVIEW PER 2ND R.A.I.
P1	07/02/09	ISSUED FOR REVIEW

DRAWN BY: PSK

REV. P6 | DATE 01/26/10

SCALE 1" = 100'

CENTRAL BEEF IND., LLC
SUMTER COUNTY, FLORIDA

PROPOSED SPRAY FIELD
SITE PLAN (SHT 1 OF 2)

COPYRIGHT © 2009

ENGINEER:
STEVEN A. DUTCH, P.E.
REG. NO. 39118

DRAWING NO.
896905 – C1

GRAPHIC SCALE

(IN FEET)
1 inch = 100 ft.

chastain skillman incorporated

engineers — architects — surveyors — scientists

Lakeland Sebring Tampa Tallahassee

C.A. No. 242

REVISION NO.	DATE	DESCRIPTION
P6	01/26/10	REV. PER FDEP CONSTRUCTION PERMIT
P5	12/22/09	REV. PER COMMENT
P4	12/10/09	REV. PER COMMENT
P3	08/04/09	ISSUED FOR REVIEW PER 2ND R.A.I.
P2	07/28/09	ISSUED FOR REVIEW PER 2ND R.A.I.
P1	07/02/09	ISSUED FOR REVIEW

DRAWN BY: PSK

REV. P6 DATE 01/26/10

SCALE 1" = 100'

CENTRAL BEEF IND., LLC
SUMTER COUNTY, FLORIDA

PROPOSED SPRAY FIELD
SITE PLAN (SHT 2 OF 2)

COPYRIGHT © 2009

ENGINEER:
STEVEN A. DUTCH, P.E.
REG. NO. 39118

DRAWING NO.
896905 – C2

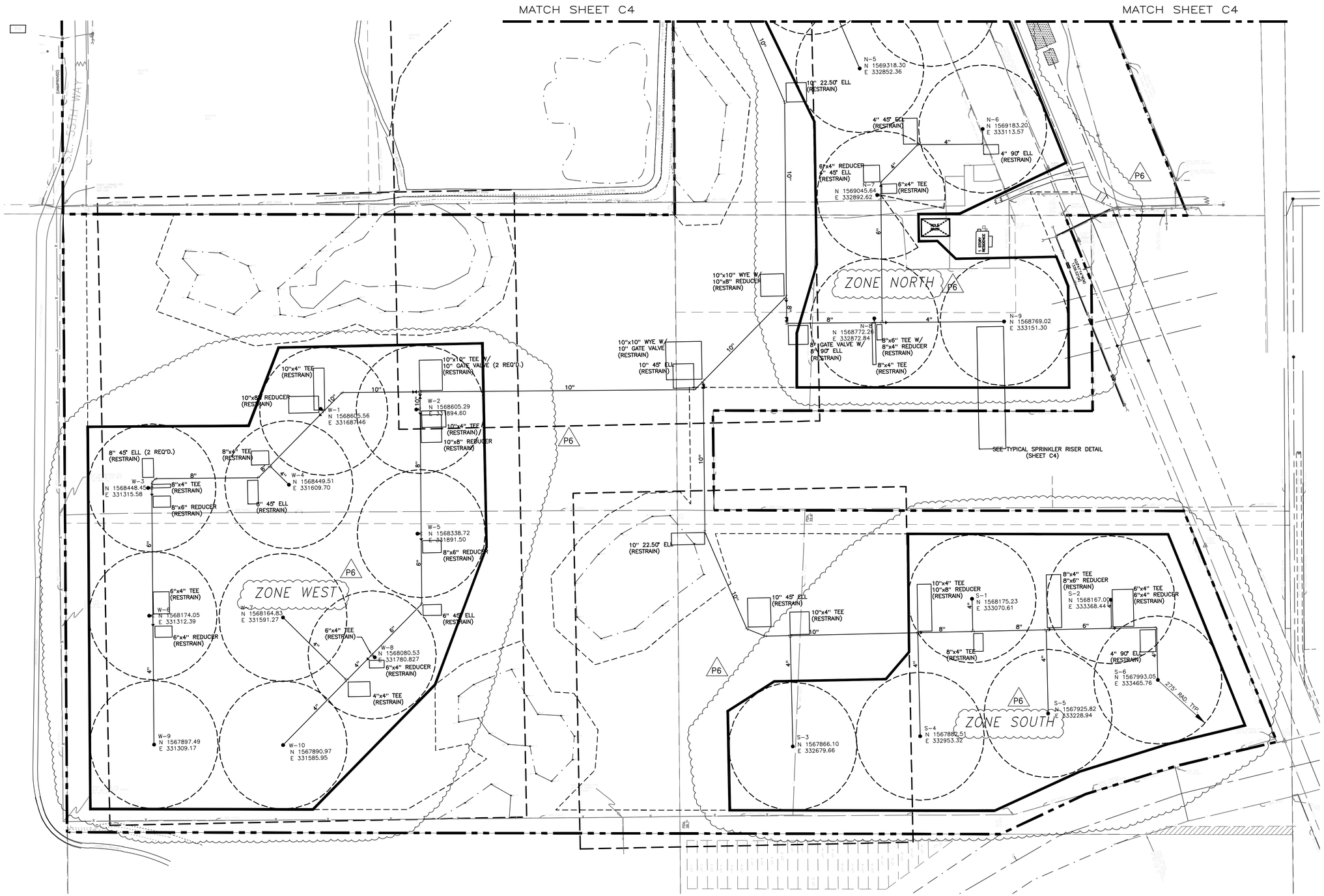

NOTES:

1.) ALL PIPE SHALL BE PVC C900 DR 18.

2.) ALL FITTINGS SHALL BE DUCTILE IRON.

3.) ALL JOINTS SHALL BE RESTRAINED.

4.) ALL PIPE SHALL HAVE A MINIMUM OF 3 FEET OF COVER OVER THE PIPE.

GRAPHIC SCALE

(IN FEET)
1 inch = 100 ft.

chastain skillman incorporated
engineers – architects – surveyors – scientists
Lakeland Sebring Tampa Tallahassee

REV.	DATE	DESCRIPTION
P6	01/26/10	REV. PER FDEP CONSTRUCTION PERMIT
P5	12/22/09	REV. PER COMMENT
P4	12/10/09	REV. PER COMMENT
P3	08/04/09	ISSUED FOR REVIEW PER 2ND R.A.I.
P2	07/28/09	ISSUED FOR REVIEW PER 2ND R.A.I.
P1	07/02/09	ISSUED FOR REVIEW

REVISION NO. REVISION DATE

DRAWN BY: PSK
REV. P6
DATE 01/26/10
SCALE 1" = 100'

CENTRAL BEEF IND., LLC
SUMTER COUNTY, FLORIDA

PROPOSED SPRAY FIELD
PIPING PLAN (SHT 1 OF 2)

COPYRIGHT © 2009

ENGINEER:
STEVEN A. DUTCH, P.E.
REG. NO. 39118

DRAWING NO.
896905 – C3

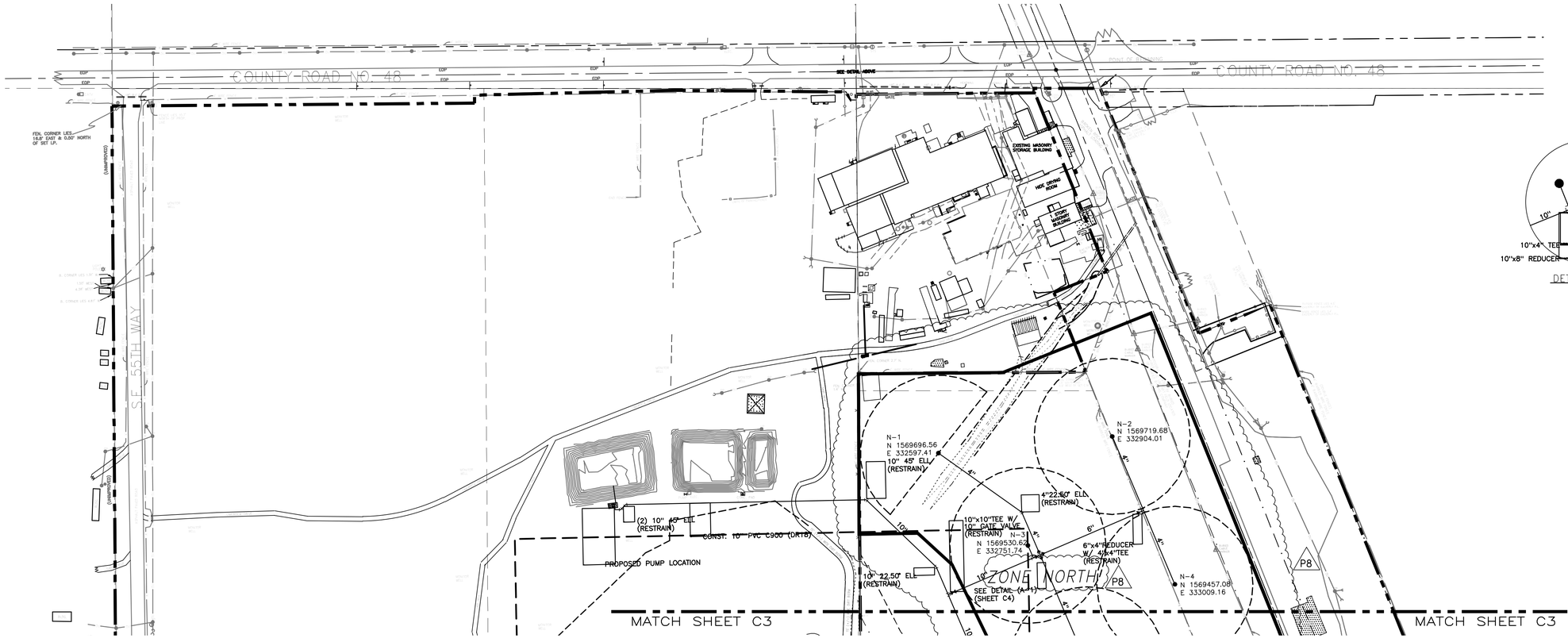

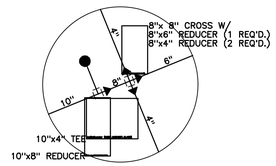

DETAIL (A-1)
N.T.S.

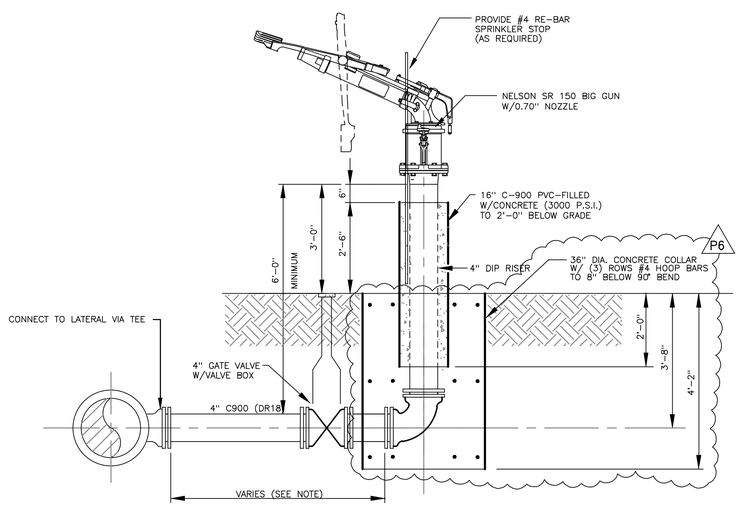

TYPICAL SPRINKLER RISER DETAIL
N.T.S.

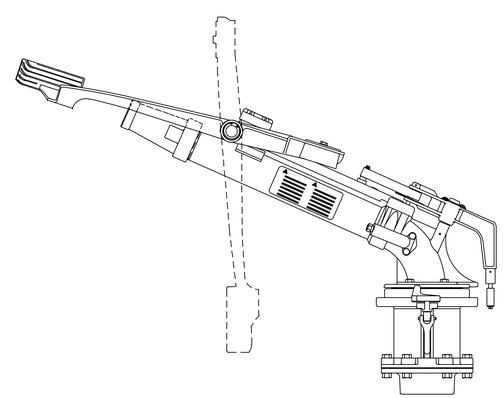

NELSON SR150 BIG GUN
NTS

GRAPHIC SCALE

(IN FEET)
1 inch = 100 ft.

chastain skillman incorporated
engineers – architects – surveyors – scientists
Lakeland Sebring Tampa Tallahassee

REVISION NO.	DATE	DESCRIPTION
P8	01/26/10	REV. PER FDEP CONSTRUCTION PERMIT
P7	01/26/10	REV. SPRINKLER RISER DETAIL
P6	01/18/10	REV. SPRINKLER RISER DETAIL
P5	12/22/09	REV. PER COMMENT
P4	12/10/09	REV. PER COMMENT
P3	08/04/09	ISSUED FOR REVIEW PER 2ND R.A.I.
P2	07/28/09	ISSUED FOR REVIEW PER 2ND R.A.I.
P1	07/02/09	ISSUED FOR REVIEW

DRAWN BY: PSK
REV. P7
DATE 01/26/10
SCALE 1" = 100'

CENTRAL BEEF IND., LLC
SUMTER COUNTY, FLORIDA

PROPOSED SPRAY FIELD
PIPING PLAN (SHT 2 OF 2)

COPYRIGHT © 2009

ENGINEER:
STEVEN A. DUTCH, P.E.
REG. NO. 30118

DRAWING NO.
896905 – C4

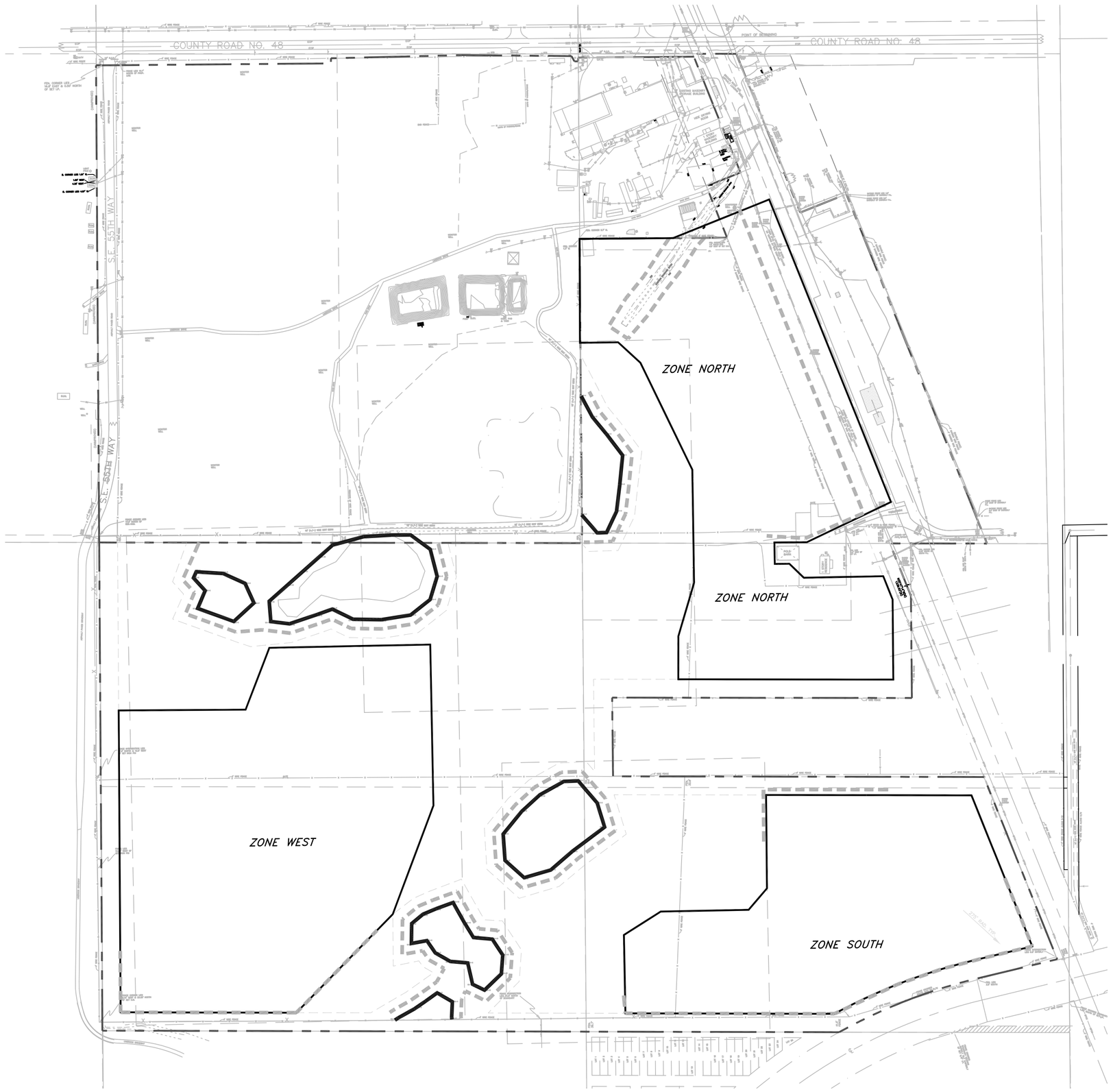

GRAPHIC SCALE

200 0 100 200 400 800

(IN FEET)
1 inch = 200 ft.

NOTES:

1. CONTRACTOR SHALL PROVIDE A DETAILED EROSION AND SEDIMENT CONTROL PLAN TO THE OWNER AND ENGINEER PRIOR TO SITE MOBILIZATION. SILT FENCE LOCATION SHOWN ON PLAN MAY BE ADJUSTED TO ACCOMMODATE THE CONTRACTOR'S SCHEDULE, MEANS AND METHODS.
2. CONTRACTOR WILL BE RESPONSIBLE FOR COMPLYING WITH NPDES STORMWATER PROGRAM. CONTRACTOR SHALL PREPARE A STORMWATER POLLUTION PREVENTION PLAN (SWPPP) AND FILING A NOTICE OF INTENT (NOI) TO USE A GENERAL PERMIT WITH FDEP. THE NOI MUST BE FILED 48 HOURS PRIOR TO THE START OF CONSTRUCTION ACTIVITY. THE CONTRACTOR SHALL PROVIDE TWO (2) COPIES OF THE NOI AND SWPPP TO THE OWNER AND ENGINEER PRIOR TO THE START OF CONSTRUCTION. PERMIT FEE IS $400.00
3. CONTRACTOR SHALL BE RESPONSIBLE FOR MAINTAINING EROSION CONTROL AND OTHER DEVICES TO COMPLY WITH THE SWPPP.
4. CONTRACTOR SHALL INSTALL, MAINTAIN AND REMOVE EROSION CONTROL DEVICES ALONG EACH SIDE OF THE CONSTRUCTION ZONE BARRIERS IN SUPPORT OF CONSTRUCTION OPERATIONS PER FDOT INDEX 102.
5. CONTRACTOR SHALL INSTALL, MAINTAIN AND REMOVE ROCK BAG AND/OR GALE TYPE BARRIERS AROUND INLETS IMPACTED BY OR ADJACENT TO THE CONSTRUCTION ZONE PER FDOT INDEX 102.
6. CONTRACTOR SHALL INSTALL, MAINTAIN AND REMOVE TURBIDITY BARRIERS IN SUPPORT OF CONSTRUCTION OPERATIONS PER FDOT INDEX 103.
7. CONTRACTOR SHALL PROVIDE A DEWATERING PLAN WHERE REQUIRED INCLUDING MEANS AND METHODS FOR WATER DISPOSAL.
8. CONTRACTOR SHALL MAINTAIN A CLEAR PATH TO DRAINAGE INLETS FOR OFFSITE STORMWATER.

DELINEATED WETLAND LINES

SILT FENCE

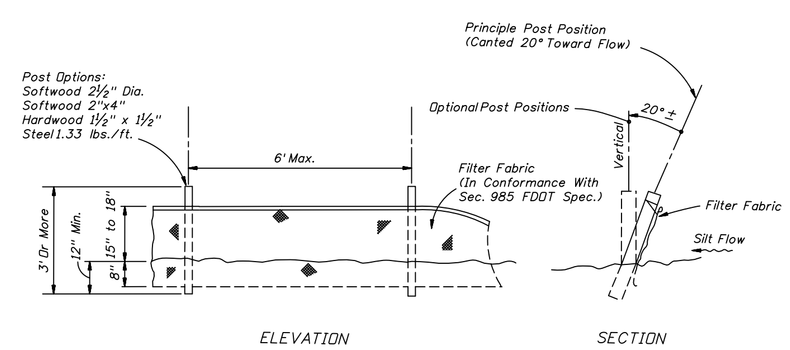

TYPE III SILT FENCE DETAIL

ZONE COVERAGE

ZONE NORTH = 14.72 AC

ZONE SOUTH = 10.25 AC

ZONE WEST = 16.11 AC

TOTAL = 41.08 AC

REV.	DATE	
1	02/22/10	REV. SILT-FENCE LAYOUT
0	01/29/10	ISSUED FOR PERMITTING

SHT.	DATE
P2	02/22/10

SCALE: 1" = 200'

CENTRAL BEEF IND., LLC
SUMTER COUNTY, FLORIDA

STORMWATER POLLUTION PREVENTION PLAN

DRAWING NO.
C5

STORM WATER POLLUTION PREVENTION PLAN

SITE DESCRIPTION AND GENERAL INFORMATION

Project Name and Location

CENTRAL BEEF SPRAYFIELD EXPANSION

This Storm Water Pollution Prevention Plan entails the construction of a storm water system At the intersection of Palm Ave. and C Street, in the City of Frostproof, located in Polk County

Project Description

Total Site Area: 80± Acres
Total Disturbed Area: = 44 Acres

Effluent Spray Field for Industrial Facility

Sequence of Major Activities

The order of major activities will be as follows:

1. Install silt screen as needed. Silt fences shall be used in lieu of temporary perimeter swales.
2. Site clearing, tree removal, and grubbing.
3. Install irrigation system.
4. When all construction is complete, stabilize (e.g. sod, seed/mulch, etc.) any remaining disturbed areas.

Sufficient precautions shall be taken to prevent pollution of streams, canals, lakes, reservoirs, wetlands, and other water impoundments. Also, operations shall be conducted and scheduled so as to avoid pollution or siltation of streams, water bodies, etc.

STORM WATER POLLUTION PREVENTION

Erosion and Sediment Transport Prevention

The work specified in this section consists of measures required to control erosion and transport of sediments within and from the project area, so as to prevent the degradation of receiving waters, detrimental effects on public or private property adjacent to the project and damage within the project area. These measures will include the construction and maintenance of temporary and permanent erosion controls.

Construction operations shall be restricted to those areas where it is necessary to perform filling or excavation to accomplish the work shown on the drawings and to those areas which must be entered to construct temporary or permanent structures. As soon as the conditions will permit, rivers, streams, impoundment, storm water storage and conveyance systems and any onsite receiving water bodies shall be promptly cleared of all obstructions placed therein or caused by construction operations. Runoff from unstabilized areas shall be directed to either the onsite retention pond or treated through silt fences before discharging from the property.

Erosion Practices

Permanent erosion control features shall be incorporated into the project at the earliest practical time. Temporary control features will be used to correct conditions that develop during construction which were not foreseen at the time of design to control erosion prior to the time it is practical to construct permanent control features.

Temporary erosion control may be used in controlling erosion in areas where conditions not under the control of the contractor, preclude completion of a section of a project in a continuous manner, and for controlling erosion in areas where construction operations must be performed subsequently that will cause damage to permanent erosion control features. Temporary erosion and water pollution control features shall consist of, but not be limited to, grass, temporary mulching, sandbagging, sediment basins, sediment checks/earth ditch checks, berms, floating turbidity barriers, hay bales and silt fence.

Stabilization Practices

Temporary Stabilization – Soil stock piles and disturbed portions of the site where construction activity temporarily ceases for at least 21 days will be stabilized within 7 days from the last construction activity in that area. These areas shall be stabilized with temporary seed and mulch. The surface areas of unprotected erodible earth exposed by clearing and grubbing, excavation or filling operations shall be kept to a minimum as practical.

Permanent Stabilization – All disturbed portions of the site where construction activities have permanently ceased will be stabilized by sod or seed and mulch in accordance with the Landscaping Plans and/or Construction Plans.

Structural Practices

Staked Silt Screens – Will be installed according to the plans to protect offsite areas from any possible adverse effects from sediments. Sediment will be removed from the upstream side of any silt screen once the accumulated sediment reaches 1/3 the height of the silt screen. Any sediment deposits or soil disturbance created during the installation and removal of silt screen shall be dressed to conform to the finished grade.
The silt screen shall be inspected along with the rest of the project once every seven days or within 24 hours of a rainfall event exceeding 0.5". Where deficiencies exist, additional silt fences shall be installed or replaced. Attachment of silt screen to existing trees will not be permitted unless approved by the Project Engineer.

Note: The following controls concern day-to-day activities on the site. The site superintendent is responsible for seeing that they are carried out appropriately.

Waste Disposal

Waste Materials – All waste materials will be collected and stored in metal dumpsters and then hauled to an approved disposal site. The dumpsters will meet all county and state solid waste management regulations. All trash and construction debris from the site will be deposited in the dumpster. No construction waste will be buried on the site. All personnel will be instructed in the correct procedure for waste disposal. Employee waste and other loose materials, e.g., cups, cans, bags, etc., will be collected so as to prevent the release of "floatables" during runoff events.

Hazardous Waste – All hazardous waste materials will be disposed of in the manner specified by local or state regulations, or by the manufacturer.

Sanitary Waste – All sanitary waste will be collected from the portable units in a timely manner meeting all local and state regulations.

Timing of Control Measures

Areas where the ground has been disturbed and construction activities temporarily will cease for more than 21 days shall be stabilized with a temporary seed and mulch within 7 days of the last disturbance. Once construction activity ceases permanently in an area where the ground has been disturbed, that area will be stabilized with sod or other suitable stabilization materials. After the site is stabilized, all excess sediments and debris will be removed from the ponds receiving direct runoff from the area.

CERTIFICATION OF COMPLIANCE WITH FEDERAL, STATE AND LOCAL REGULATIONS

The onsite practices shall comply with this storm water pollution prevention plan as well as reflect the requirements of the:

1. FDEP's NPDES Generic Permit for Construction Activities, 62-621.300(4), F.A.C.)
2. All state requirements of storm water management systems under chapters 40D-4, 40D-40 and 40D-400 of the Florida Administrative Code, as administered by the Southwest Florida Water Management District in addition 33 CFR administered by the Army Corp of Engineers.

MAINTENANCE/INSPECTION PROCEDURES

Erosion and Sediment Control Inspection and Maintenance Practices

The following practices will be utilized to maintain erosion and sediment controls:

All control measures will be inspected at least once every seven (7) days and within 24 hours of any rainfall exceeding 0.5 inches. A maintenance inspection report will be made after each inspection. These inspection reports will be kept as a part of the storm water pollution prevention plan for at least three (3) years from the date the site is finally stabilized. A copy of the inspection report form is provided.

All measures will be maintained in good working order; if a repair is necessary, it will be initiated within 24 hours of its reporting.

The drainage structures will be inspected for depth of sediments. Sediments will be removed at the completion of the construction.

Temporary seeding and permanent sodding or seeding/mulching will be inspected for bare spots, washouts, and healthy growth. Any deficiencies shall be corrected.

A qualified person will be designated to perform the inspections and fill out the inspection and maintenance report.

The silt screen shall be inspected immediately after each rainfall and at least daily during prolonged rainfall. Where deficiencies exist, additional silt fences shall be installed or replaced. Sediment will be removed from the upstream side of any silt screen once the accumulated sediment reaches 1/3 the height of the silt screen. Any sediment deposits or soil disturbance created during the installation and removal of silt screen shall be dressed to conform to the finished grade.

INVENTORY OF BUILDING MATERIALS EXPECTED TO BE PRESENT ONSITE

Materials present onsite during construction will include those normally associated with this type of construction:

Concrete, rebar, pipe, fittings and related materials.

MATERIAL MANAGEMENT (POLLUTION PREVENTION) PRACTICES

The following material management practices will be used to reduce the risk of spills or other accidental exposure of materials and substances to storm water runoff:

General Practices

The following general practices will be followed onsite during the construction project:

Sufficient precautions should be taken to prevent pollution of water bodies directly or indirectly with fuels, oils, bitumens, calcium chloride, or other harmful materials

An effort will be made to store only enough products required for this project.

All materials stored onsite will be stored in a neat, orderly manner in their appropriate containers and, if possible, under a roof or other enclosure.

Products will be kept in their original containers with the original manufacturer's label.

Substances will not be mixed with one another unless recommended by the manufacturer.

Whenever possible, all of a product will be used before disposing of the container.

Manufacturers' recommendations for proper use and disposal will be followed.

The site will be inspected daily to ensure proper use and disposal of materials.

Hazardous Products

The following practices will be utilized to reduce the risks associated with hazardous materials:

Products will be kept in their original containers unless they are not resealable.

Original labels and material safety data will be retained; they contain important product information.

If surplus product must be disposed of, manufacturers' or local and state recommended methods for proper disposal will be followed.

Product Specific Practices

The following product specific practices will be followed onsite:

Petroleum products – All onsite vehicles will be monitored for leaks and receive regular preventive maintenance to reduce the chance of leakage. Petroleum products will be stored in tightly sealed containers that are clearly labeled. Any asphalt substances used onsite will be applied according to the manufacturer's recommendations.

Spill Prevention and Cleanup

In addition to the materials management practices discussed in the previous sections of this plan, the following practices will be followed for spill prevention and cleanup:

Manufacturer's recommended methods for spill cleanup will be clearly posted and site personnel will be made aware of the procedures and the locations of the information and cleanup supplies.

Materials and equipment necessary for spill cleanup will be kept in the material storage area that is onsite. Equipment and materials will include brooms, dust pans, gloves and plastic and metal trash containers, etc. specifically for this purpose.

All spills will be cleaned up immediately after discovery.

The spill area will be kept well ventilated and personnel will wear appropriate protective clothing to prevent injury from contact with a hazardous substance.

Spills of toxic or hazardous material will be reported to the appropriate state or local government agency, regardless of the size.

The spill prevention plans will be adjusted to include measures to prevent this type of spill from reoccurring and how to clean up this type of spill if there is another one. A description of the spill, its cause, and the cleanup measures will also be included.

storm water pollution prevention plan
inspection and manintenance report form

engineers – architects – surveyors – scientists
chastain skillman incorporated
Lakeland Sebring Tampa Tallahassee
Corporate Headquarters : 4705 Old Hwy 37, P.O. Box 5710, Lakeland, FL 33807-5710 (863) 646-1402
C.A. No. 262

ISSUED FOR PERMITTING
REVISION DESCRIPTION
01/25/10
REVISION DATE
P0
REVISION NO.
DRAWN BY: AOH
REV.: P0
DATE: 01/25/10
SCALE: NO SCALE

CENTRAL BEEF IND., LLC
SUMTER COUNTY, FLORIDA

STORMWATER POLLUTION PREVENTION PLAN

COPYRIGHT © 2009

ENGINEER:
STEVEN A. DUTCH, P.E.
REG. NO. 39118

DRAWING NO.
896905 – C6

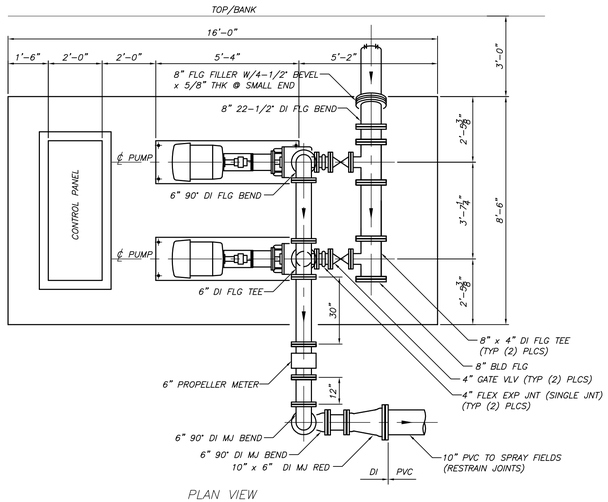

PLAN VIEW

PUMP SCHEDULE / SPECIFICATION:

FLOW:	600 GPM
TDH:	175 FEET
PUMP SPEED:	3500 RPM
PUMP DRIVE:	50 HP, 3 PHASE, 480 VOLTS
IMPELLER:	7.50 INCHES
MANUFACTURER:	FLOWSERVE
MODEL:	2K4 X 3US-82RV-M3US OR EQUAL

CONTROL SCHEME / PANEL REQUIREMENTS:

1.) PUMPS SHALL BE OPERATED MANUALLY. NO AUTOMATIC CONTROLS SHALL BE PROVIDED.

2.) PANEL SHALL HAVE A PUMP SELECTOR SWITCH & AN ON-OFF SWITCH.

3.) A PILOT LIGHT SHALL INDICATE WHICH PUMP IS OPERATING.

4.) AN EMERGENCY PUMP-OFF FLOAT SWITCH SHALL BE PROVIDED AT ELEVATION 86.0 IN POND.

5.) PANEL SHALL INCLUDE AN EXTERIOR ALARM LIGHT & RUNTIME METER.

6.) PANEL SHALL BE NEMA 3R, 304 STAINLESS STEEL ENCLOSURE FOR OUTDOOR INSTALLATION.

7.) PANEL SHALL HAVE SURGE CAPACITOR PROTECTION MOUNTED ON THE INCOMING POWER SOURCE.

8.) A DUPLEX 15A 120V GROUND FAULT RECEPTACLE SHALL BE PROVIDED.

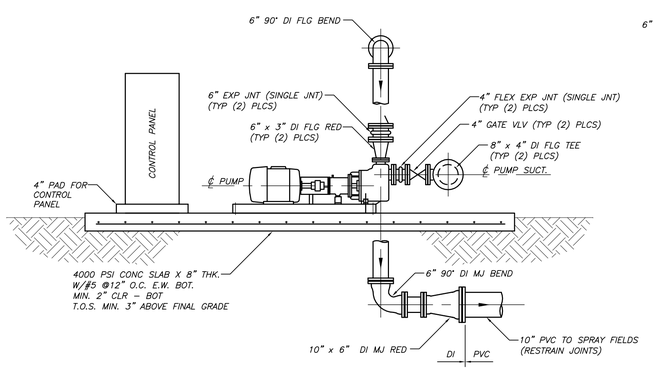

SOUTH ELEVATION

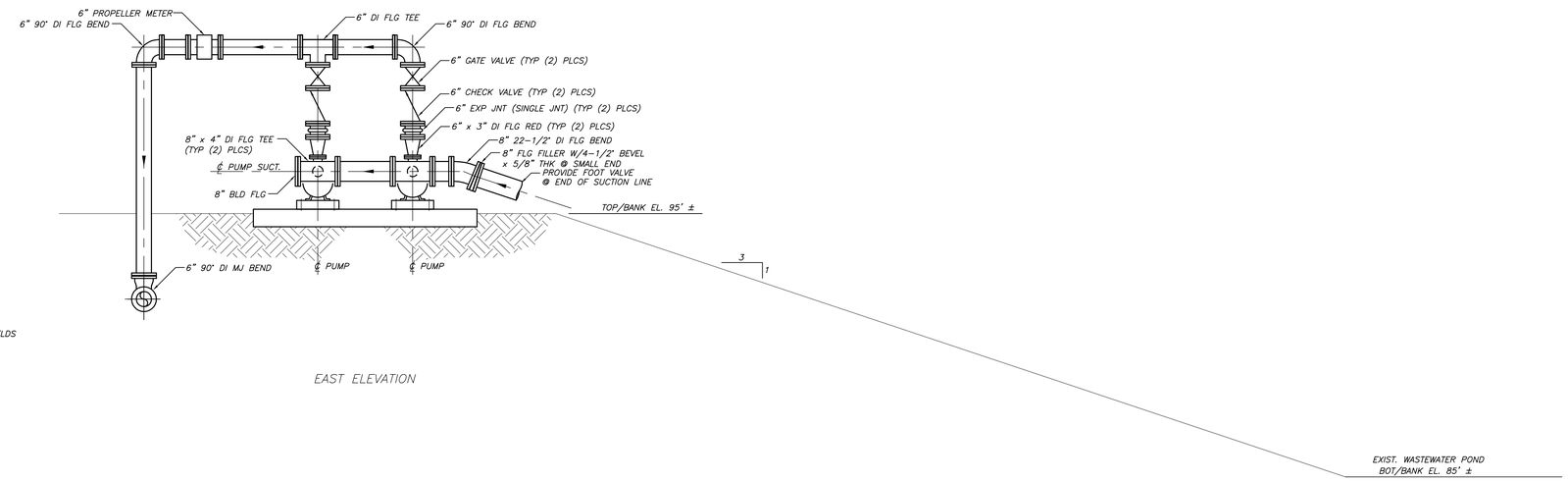

EAST ELEVATION

chastain skillman incorporated
engineers - architects - surveyors - scientists
Lakeland Sebring Tampa Orlando Tallahassee
C.A. No. 262
Design Office : 4700 Old Highway 37, P.O. Box 1733, Lakeland, Florida 33802-1733, (863) 646-1402
Corporate Headquarters : 4700 Old Hwy. 37, P.O. Box. 53781, Lakeland, FL 33807-3781 (863) 646-1402

REV.	DATE	REVISION DESCRIPTION
P1	12/22/09	PRELIMINARY DESCRIPTION

REVISION NO. / REVISION DATE

DRAWN BY NAME

REV. P1 — DATE 12/22/09

SCALE 3/8" = 1'-0"

CENTRAL BEEF IND., LLC
SUMTER COUNTY, FLORIDA

WASTEWATER PONDS
PUMP STATION PLAN & ELEVATIONS

COPYRIGHT © 2009

ENGINEER:
STEVEN A. DUTCH, PE
REG. NO. 39118

DRAWING NO.
896905 - M1

P:\896905\CAD\proj\DESIGN\09-340-09-WW-POND-PS.dwg M1 Dec 22, 2009 3:13pm by rcoyne