PRELIMINARY/ENGINEERING SITE DEVELOPMENT PLANS
FOR
MURPHY EXPRESS
EAST COUNTY ROAD 466 AT CR 105
WILDWOOD, FL
PIN: 402207278003

SITE DATA

PIN: 402207278003

OVERALL LOT SIZE: +/- 1.283 ACRES

ZONING: CL - LIGHT COMMERCIAL

ALLOWABLE USES: GAS ALLOWED, C-STORE ALLOWED

PROPOSED USE: 2,756 SF C-STORE W/ 10 PUMPS

PUMPS ALLOWED: 10 PUMPS ALLOWED

BUILDING SETBACKS:
- FRONT: 50'
- SIDE: 30'
- SIDE (ROAD): 25'
- REAR: 20'

BUFFERS/SETBACKS:
- FRONT: 25' LANDSCAPE BUFFER/SETBACK W/ 5' SIDEWALK
- SIDES: N/A
- REAR: N/A

FLOOR AREA RATIO PROPOSED:
- 0.05 (C-STORE ONLY)
- 0.16 (C-STORE & CANOPY)

FLOOD CERTIFICATION:

BASED ON AN INSPECTION OF FEMA FLOOD INSURANCE RATE MAP (F.I.R.M.) COMMUNITY PANEL NO. 120296 0075 B, DATED MARCH 15, 1982, THE PROPERTY SHOWN HEREON APPEARS TO LIE IN FLOOD ZONE C

WETLANDS NOTE:

ANY DEVELOPMENT, EXCAVATION, CONSTRUCTION, OR FILLING IN A U.S. ARMY CORPS OF ENGINEERS DESIGNATED WETLAND IS SUBJECT TO LOCAL, STATE AND FEDERAL APPROVALS. THE CONTRACTOR SHALL COMPLY WITH ALL PERMIT REQUIREMENTS AND/OR RESTRICTIONS AND ANY VIOLATION WILL BE SUBJECT TO FEDERAL PENALTY. THE CONTRACTOR SHALL HOLD THE OWNER/DEVELOPER, THE ENGINEER AND THE LOCAL GOVERNING AGENCIES HARMLESS AGAINST SUCH VIOLATION.

SECTION 17, TOWNSHIP 18 SOUTH, RANGE 23 EAST
SUMTER COUNTY, FLORIDA

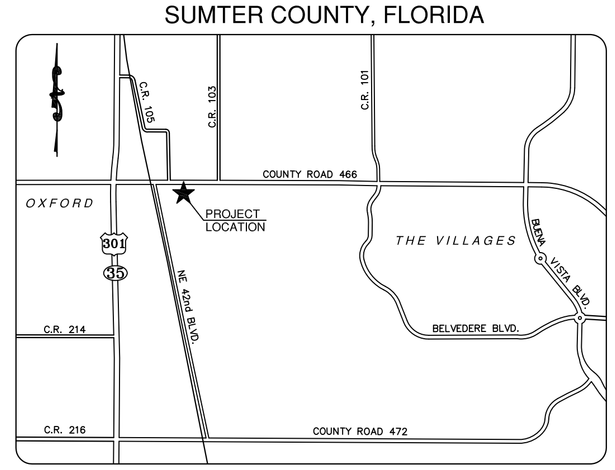

VICINITY MAP
(NOT TO SCALE)

WARRANTY/DISCLAIMER:
THE DESIGNS REPRESENTED IN THESE PLANS ARE IN ACCORDANCE WITH ESTABLISHED PRACTICES OF CIVIL ENGINEERING FOR THE DESIGN FUNCTIONS AND USES INTENDED BY THE OWNER AT THIS TIME. HOWEVER, NEITHER THE ENGINEER NOR ITS PERSONNEL CAN OR DO WARRANT THESE DESIGNS OR PLANS AS CONSTRUCTED EXCEPT IN THE SPECIFIC CASES WHERE THE ENGINEER INSPECTS AND CONTROLS THE PHYSICAL CONSTRUCTION ON A CONTEMPORARY BASIS AT THE SITE.

SAFETY NOTICE TO CONTRACTOR:
IN ACCORDANCE WITH GENERALLY ACCEPTED CONSTRUCTION PRACTICES, THE CONTRACTOR SHALL BE SOLELY AND COMPLETELY RESPONSIBLE FOR CONDITIONS OF THE JOB SITE, INCLUDING SAFETY OF ALL PERSONS AND PROPERTY DURING PERFORMANCE OF THE WORK. THIS REQUIREMENT WILL APPLY CONTINUOUSLY AND NOT BE LIMITED TO NORMAL WORKING HOURS. ANY CONSTRUCTION OBSERVATION BY THE ENGINEER OF THE CONTRACTOR'S PERFORMANCE IS NOT INTENDED TO INCLUDE REVIEW OF THE ADEQUACY OF THE CONTRACTOR'S SAFETY MEASURES, IN, ON OR NEAR THE CONSTRUCTION SITE.

DRAWING LIST

DRAWING LIST	SHEET
COVER SHEET	C-1
VICINITY MAP	C-1A
TOPOGRAPHIC SURVEY	C-2
DEMOLITION PLAN	C-3
SITE PLAN	C-4
SITE DETAILS	C-5, C-6
GRADING PLAN	C-7
POND SECTION AND STORMDRAIN DETAILS	C-8
EROSION CONTROL PLAN PHASE 1	C-9
EROSION CONTROL PLAN PHASE 2	C-10
EROSION CONTROL DETAILS	C-11, C-12, C-13
UTILITY PLAN	C-14
UTILITY DETAILS	C-15
PAVING PLAN	C-16
LANDSCAPE PLAN	L-1
LANDSCAPE DETAILS	L-2
IRRIGATION PLANS (NOT INCLUDED)	I-1
IRRIGATION DETAILS (NOT INCLUDED)	I-2
PHOTOMETRIC SITE PLAN	P-1

AGENCY AND UTILITY CONTACTS

WATER:
CITY OF WILDWOOD WATER DEPARTMENT
100 NORTH MAIN STREET
WILDWOOD, FL 34785
CONTACT: RON ALLEN
PHONE: 352-330-1346
FAX: 352-330-1338

SEWER:
CITY OF WILDWOOD WASTEWATER
100 NORTH MAIN STREET
WILDWOOD, FL 34785
CONTACT: PETE BENNETT
PHONE: 352-330-1349
FAX: 352-330-1350

PLANNING/ZONING:
SUMTER COUNTY PLANNING & DEVELOPMENT DEPARTMENT
910 NORTH MAIN STREET
SUITE 301
BUSHNELL, FL 33513
CONTACT: AIMEE WEBB
PHONE: 352-793-0270
FAX: 352-793-0274

POWER:
SUMTER ELECTRIC COOPERATIVE
330 SOUTH US HIGHWAY 301
SUMTER, FL 33585
CONTACT: LORI COOK
PHONE: 352-793-3801
FAX: 352-793-1604

TELEPHONE:
CENTURY LINK
319 SOUTHEAST BROADWAY STREET
OCALA, FL 34474
CONTACT: GREG SCHMID
PHONE: 352-401-6555
FAX: 352-368-8889

GENERAL NOTES:

1. INFORMATION CONCERNING UNDERGROUND UTILITIES WAS OBTAINED FROM AVAILABLE RECORDS AND FIELD CONDITIONS WHEN POSSIBLE, BUT THE CONTRACTOR MUST DETERMINE THE EXACT LOCATION AND ELEVATION OF ALL EXISTING UTILITIES BY DIGGING TEST PITS BY HAND AT ALL UTILITY CROSSINGS WELL IN ADVANCE OF TRENCHING. IF THE CLEARANCES ARE LESS THAN SPECIFIED ON THE PLANS OR 12", WHICHEVER IS LESS, CONTACT COMMERCIAL SITE SOLUTIONS, INC. (813-885-2032) AND OWNER PRIOR TO PROCEEDING WITH CONSTRUCTION.

2. THE CONTRACTOR SHALL INCLUDE IN HIS CONTRACT PRICE THE REMOVAL AND DISPOSAL OF ANY EXCESS TOPSOIL HE DETERMINES IS NOT REQUIRED TO PERFORM THE FINAL GRADING AND LANDSCAPING OPERATION.

3. THE CONTRACTOR IS RESPONSIBLE FOR THE DESIGN AND IMPLEMENTATION OF ALL REQUIRED/NECESSARY SHEETING, SHORING, AND SPECIAL EXCAVATION MEASURES REQUIRED ON THE PROJECT TO MEET OSHA, FEDERAL, STATE AND LOCAL REGULATIONS PURSUANT TO THE INSTALLATION OF THE WORK INDICATED ON THE DRAWINGS. OWNER AND COMMERCIAL SITE SOLUTIONS, INC. ACCEPT NO RESPONSIBILITY FOR THE DESIGN TO INSTALL SAID ITEMS.

4. CALL FLORIDA ONE CALL: UTILITY LOCATOR SERVICE 72 HOURS IN ADVANCE OF DIGGING AT 1-800-432-4770.

5. ALL WORK SHALL CONFORM TO THE SUMTER COUNTY STANDARDS AND SPECIFICATIONS.

6. ALL CURB/HANDICAP RAMP DESIGNS SHALL CONFORM TO ADA OR THE SUMTER COUNTY STANDARDS, WHICHEVER IS MORE RESTRICTIVE.

7. PRE-CAST DRAINAGE AND SANITARY SEWER STRUCTURES HAVE BEEN SPECIFIED ON THE PLANS. OWNER AND COMMERCIAL SITE SOLUTIONS, INC., HOWEVER, ASSUME NO RESPONSIBILITY FOR THESE STRUCTURES AS FIELD CONDITIONS DURING CONSTRUCTION OFTEN DICTATE MINOR ELEVATION ADJUSTMENTS. THE CONTRACTOR ASSUMES ALL RESPONSIBILITY AND EXPENSE FOR MODIFYING THESE STRUCTURES TO ACCOMMODATE THESE FIELD ADJUSTMENTS.

8. THE CONTRACTOR SHALL INCLUDE IN THE CONTRACT PRICE DAILY RECORD KEEPING OF THE AS-BUILT CONDITION OF ALL OF THE UNDERGROUND UTILITIES, CONSTRUCTION STAKEOUT ASSOCIATED WITH THE PROJECT, PREPARATION OF THE NECESSARY/REQUIRED AS-BUILT WATER AND SEWER PLANS TO BE SUBMITTED TO THE CITY OF WILDWOOD PUBLIC WORKS DEPARTMENT AND/OR FLORIDA DEPARTMENT OF ENVIRONMENTAL PROTECTION, AND ALL OTHER INFORMATION REQUIRED IN CONNECTION WITH OBTAINING PERMITS TO OPERATE AND RELEASE OF BONDS. DAILY RECORD KEEPING/REDLINES OF WORK SHOULD BE PROVIDED TO THE ENGINEER OF RECORD AND TO MURPHY USA UPON REQUEST. THE CONTRACTOR SHALL COORDINATE ANY AS-BUILT REQUIREMENTS WITH THE ENGINEER OF RECORD AT LEAST 2 WEEKS PRIOR TO REQUIRING THE CERTIFICATE OF OCCUPANCY.

9. ALL WATER LINE AND SEWER LINE INSTALLATION SHALL CONFORM TO THE STANDARDS AND DETAILS OF THE CITY OF WILDWOOD AND THE FLORIDA DEPARTMENT OF ENVIRONMENTAL PROTECTION CONSTRUCTION PERMIT.

10. A COPY OF THE FINANCIAL RESPONSIBLITY FORM AND THE STORM WATER POLLUTION PREVENTION PLAN MUST BE KEPT ON THE WORK SITE AND SHOWN UPON REQUEST.

11. THE CONTRACTOR SHALL INCLUDE IN THE CONTRACT PRICE ALL MATERIAL AND LABOR ASSOCIATED WITH THE TESTING OF THE WATER AND SEWER LINES REQUIRED BY THE CITY OF WILDWOOD PUBLIC WORKS DEPARTMENT AND/OR FLORIDA DEPARTMENT OF ENVIRONMENTAL PROTECTION.

12. THE CONTRACTOR SHALL INCLUDE IN THE CONTRACT PRICE ANY DE-WATERING NECESSARY TO CONSTRUCT THE PROJECT AS SHOWN ON THE PLANS.

13. SEDIMENT CONTROL MEASURES MUST BE INSPECTED AND MAINTAINED REGULARLY TO INSURE THAT THE INTENDED PURPOSES ARE ACCOMPLISHED.

14. ALL DRAINAGE STRUCTURES MUST MEET FDOT AND THE SUMTER COUNTY STANDARD SPECIFICATIONS.

15. ALL SITE WORK FOR THIS PROJECT SHALL MEET OR EXCEED THE PROVIDED SITE WORK SPECIFICATIONS. CONTRACTOR IS RESPONSBILE FOR TRAFFIC CONTROL WITHIN RIGHT OF WAY. THIS IS TO BE DONE IN ACCORDANCE WITH M.U.T.C.D.

16. CONTRACTOR SHALL BE RESPONSIBLE FOR RAZING AND REMOVAL OF THE EXISTING STRUCTURES, RELATED UTILITIES, PAVING, UNDERGROUND STORAGE TANKS AND ANY OTHER EXISTING IMPROVEMENTS AS NOTED.

17. CONTRACTOR IS TO REMOVE AND DISPOSE OF ALL DEBRIS, RUBBISH AND OTHER MATERIALS RESULTING FROM PREVIOUS AND CURRENT DEMOLITION OPERATIONS. DISPOSAL WILL BE IN ACCORDANCE WITH ALL LOCAL, STATE AND/OR FEDERAL REGULATIONS GOVERNING SUCH OPERATIONS.

18. THE GENERAL CONTRACTOR WILL BE HELD SOLELY RESPONSIBLE FOR AND SHALL TAKE ALL PRECAUTIONS NECESSARY TO AVOID PROPERTY DAMAGE TO ADJACENT PROPERTIES DURING THE CONSTRUCTION PHASES OF THIS PROJECT.

19. ALL CONSTRUCTION WITHIN STATE HIGHWAY DEPARTMENT RIGHT-OF-WAY SHALL BE COORDINATED WITH THE HIGHWAY DEPARTMENT RESIDENT MAINTENANCE ENGINEER.

20. ALL SITE WORK FOR THIS PROJECT SHALL MEET OR EXCEED THE SPECIFICATIONS OF THE RELEVANT UTILITY COMPANY OR REGULATORY AUTHORITY, AND THE SPECIFICATIONS FOR THE CONSTRUCTION OF THE EXISTING IMPROVEMENTS WHICH ARE BEING ALTERED OR REPLACED. CONTRACTOR SHALL CONTACT THE ENGINEER FOR SPECIFICATION SECTIONS FOR ITEMS SUCH AS LANDSCAPING AND IRRIGATION THAT ARE AFFECTED BY THE WORK BUT NOT COMPLETELY DETAILED OR SPECIFIED ON THESE PLANS.

21. CONSTRUCTION AND INSTALLATION OF 2,756 SF PREFABRICATED BUILDING, ALL UTILITY ENTRANCES, AND (2) 20,000 GALLON UNDERGROUND TANKS SHALL BE IN ACCORDANCE WITH ASSOCIATED PLANS.

22. THE GENERAL CONTRACTOR TO FIELD COORDINATE THE CANOPY SIGN LOCATION WITH MURPHY'S CONSTRUCTION SUPERVISOR.

23. STAGE II VAPOR RECOVERY SYSTEM IS NOT REQUIRED.

THE STORMWATER MANANGEMENT POND FOR THIS SITE HAS BEEN DESIGNED TO RETAIN THE 100-YEAR STORM EVENT. THERE ARE NO ADVERSE IMPACTS TO THIS SITE OR ADJACENT PROPERTIES FROM THE 100-YEAR STORM EVENT.

REVISIONS/SUBMITTALS:

5/25/10 - PERMIT SUBMITTAL

ENGINEER:

COMMERCIAL SITE SOLUTIONS, INC.
SITE PLANNING • ENGINEERING

1616 EAST BEARSS AVENUE
TAMPA, FL 33613
813-885-2032

402 EAST 1ST AVENUE
EASLEY, SC 29640
864-855-5200

OWNER/DEVELOPER:

MURPHY OIL USA, INC
422 NORTH WASHINGTON AVENUE
EL DORADO, AR 71730
PH: 870-862-6411
CONTACT: DAVID RUSH - PROJECT MANAGER

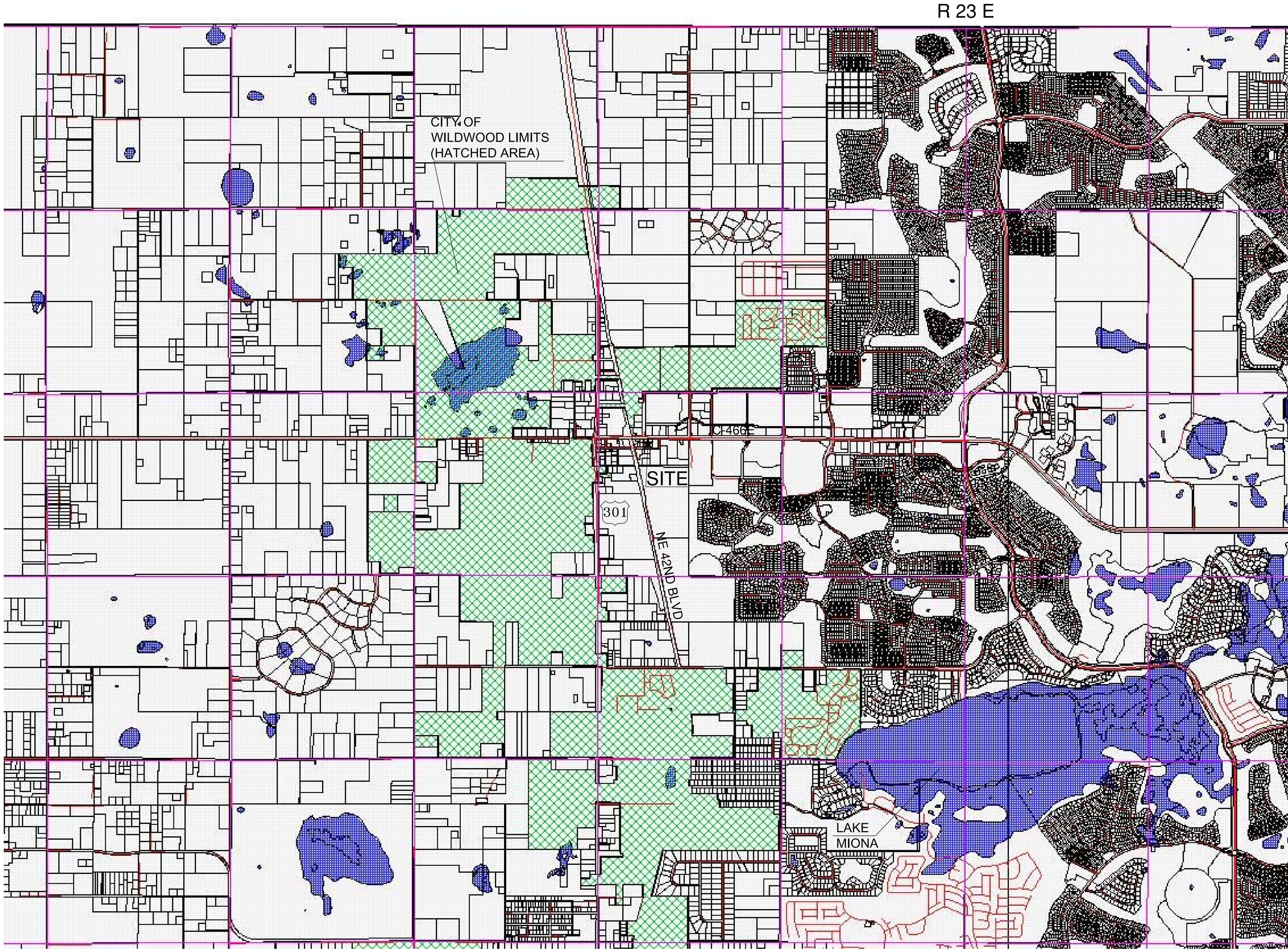

SITE

PARCEL ID:

D17=055

ZONING:

CL

(NOTE: ALL ADJOINING PROPERTIES ARE ALSO ZONED CL PER SUMTER COUNTY GIS)

EXISTING LAND USE:

RESIDENTIAL LOT WITH LARGE TREES AND SEVERAL STRUCTURES

(NOTE: THE SITE IS SURROUNDED BY COMMERCIAL PROPERTY TO THE NORTH ACROSS C-466E AND BY RESIDENTIAL PROPERTIES TO THE EAST, SOUTH, AND WEST.)

URBAN EXPANSION AREAS:

PER THE "FUTURE LAND USE MAP, SUMTER COUNTY, JUNE 2009", THE SITE IS DESIGNATED FOR FUTURE LAND USE "COMMERCIAL"

(NOTE: THE SITE IS SURROUNDED BY FUTURE LAND USE "MIXED USE" TO THE NORTH ACROSS C-466E AND BY FUTURE LAND USE "COMMERCIAL" TO THE EAST, SOUTH, AND WEST.)

N

0 0.25 0.50 0.75

SCALE: 1" = 0.25 Mile

REVISIONS

ISSUED	COMMENT

COMMERCIAL SITE SOLUTIONS, INC.
SITE PLANNING • ENGINEERING
402 EAST 1ST AVENUE
EASLEY, SC 29640
864-855-5200
5032 TAMPA WEST BLVD.
TAMPA, FL 33634
813-885-2052
813-882-4372 (FAX)

PREPARED FOR:

MURPHY OIL USA, INC.

422 NORTH WASHINGTON AVENUE
EL DORADO, AR 71730
PH: 870-875-7629

VICINITY MAP

MURPHY OIL USA WILDWOOD, FL

EAST COUNTY ROAD 466
WILDWOOD, FL

Date:	5/24/10
Drawn:	DRB
Checked:	—

C-1A

Sheet

SECTION 17, TOWNSHIP 18 SOUTH, RANGE 23 EAST
SUMTER COUNTY, FLORIDA

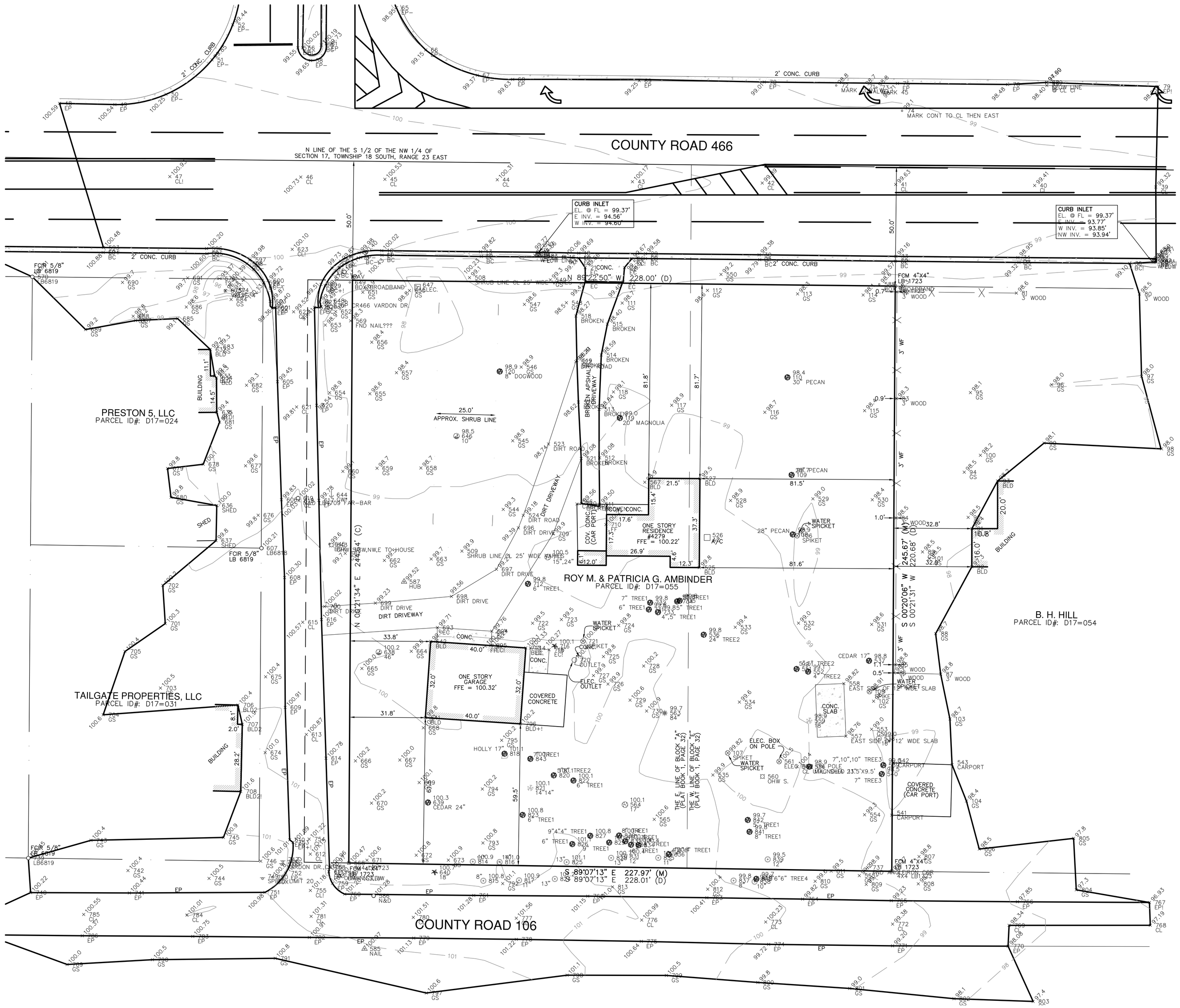

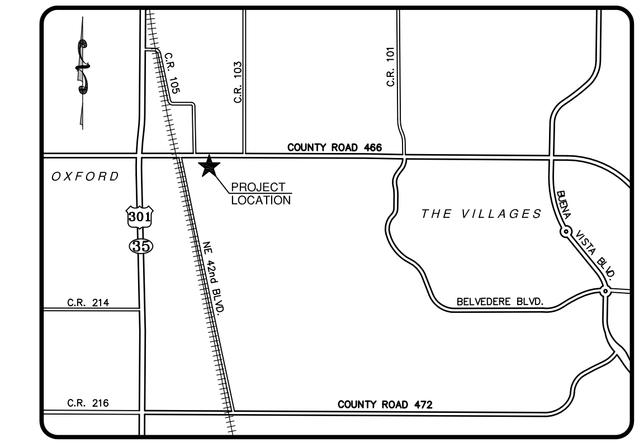

LOCATION MAP
(NOT TO SCALE)

30' 20' 10' 0 30' 60'
SCALE: 1" = 30'

LEGAL DESCRIPTION:

"THE EAST 142 FEET OF BLOCK A AND THE WEST 86 FEET OF BLOCK E OF OXFORD, ACCORDING THE PLAT THEREOF AS RECORDED IN PLAT BOOK 1, PAGE 32 OF THE PUBLIC RECORDS OF SUMTER COUNTY, FLORIDA. LESS ROAD RIGHT OF WAY FOR COUNTY ROAD 466 ACROSS THE NORTH SIDE.

TOGETHER WITH THAT PORTION OF THE EAST 1/2 OF CR 105 LYING ADJACENT TO SUMTER COUNTY TAX PARCEL #D17-055 LYING IN SECTION 17, TOWNSHIP 18 SOUTH, RANGE 23 EAST, SUMTER COUNTY, FLORIDA."

SURVEYOR'S NOTES:

1. BEARINGS SHOWN HEREON ARE BASED ON THE PLAT.
2. UNDERGROUND IMPROVEMENTS, UTILITIES AND ENCROACHMENTS, IF ANY, HAVE NOT BEEN LOCATED.
3. REPRODUCTIONS OF THIS SURVEY ARE NOT VALID UNLESS EMBOSSED WITH THE UNDERSIGNED SURVEYOR'S SEAL.
4. FIELD WORK COMPLETED DECEMBER 11, 2009.
5. LEGAL DESCRIPTION SHOWN HEREON WAS PROVIDED BY THE CLIENT.
6. THE SUBJECT PROPERTY HAS NOT BEEN ABSTRACTED FOR EASEMENTS, RIGHTS OF WAY OR OTHER MATTERS OF PUBLIC RECORD IN THE PREPARATION OF THIS SURVEY.
7. THIS SURVEY HAS BEEN PREPARED IN CONJUNCTION WITH COMMITMENT FOR TITLE INSURANCE, ISSUED BY WESTCOR LAND TITLE INSURANCE COMPANY, COMMITMENT PLANT FILE #09-8662 , DATED DECEMBER 8, 2009 @ 08:00 AM AND IS INTENDED TO DEPICT ALL ITEMS IDENTIFIED IN SCHEDULE B, SECTION II.
8. BASED ON AN INSPECTION OF FEMA FLOOD INSURANCE RATE MAP (F.I.R.M.) COMMUNITY PANEL NO. 12015C0044F, DATED MAY 5, 2003, THE PROPERTY SHOWN HEREON APPEARS TO LIE IN FLOOD ZONE X & ZONE AE (EL 12).
9. ELEVATIONS SHOWN HEREON ARE RELATIVE TO...

CERTIFIED TO:

COMMERCIAL SITE SOLUTIONS, INC.
MURPHY OIL USA, INC., A Deleware Corporation

SURVEYOR'S CERTIFICATE:

THIS IS TO CERTIFY THAT THIS MAP OR PLAT AND THE SURVEY ON WHICH IT IS BASED WERE MADE IN ACCORDANCE WITH "MINIMUM STANDARD DETAIL REQUIREMENTS FOR ALTA/ACSM LAND TITLE SURVEYS," JOINTLY ESTABLISHED AND ADOPTED BY ALTA, ACSM AND NSPS IN 1999, AND INCLUDES ITEMS 1,2,3,6,7(a & b),8,9,10,11(a), AND 13 OF "TABLE A" THEREOF. PURSUANT TO THE ACCURACY STANDARDS AS ADOPTED BY ALTA, NSPS, AND ACSM AND IN EFFECT ON THE DATE OF THIS CERTIFICATION, UNDERSIGNED FURTHER CERTIFIES THAT PROPER FIELD PROCEDURES, INSTRUMENTATION, AND ADEQUATE SURVEY PERSONNEL WERE EMPLOYED IN ORDER TO ACHIEVE RESULTS COMPARABLE TO THOSE OUTLINED IN THE "MINIMUM ANGLE, DISTANCE, AND CLOSURE REQUIREMENTS FOR SURVEY MEASUREMENTS WHICH CONTROL LAND BOUNDARIES FOR ALTA/ACSM LAND TITLE SURVEYS."

DRAFT

DATE: _____

WILLIAM C. WARD
PROFESSIONAL LAND SURVEYOR NO. 4815
STATE OF FLORIDA

NO.	REVISION	DATE	BY

GULFCOAST
SURVEYORS - MAPPERS - PLANNERS, INC.
1110 PINELLAS BAYWAY, SUITE 111, TIERRA VERDE, FLORIDA 33715
PHONE: 727-864-9211 FAX: 727-864-9215
www.gulfcoastsurvey.com

DRAWN BY:	TS
CHECKED BY:	WCW
DATE:	12/XX/09
JOB NUMBER:	09062
FILE:	S:\GCSA\2009\...\09062-1.dwg

MURPHY OIL - OXFORD/WILDWOOD
4279 C.R. 466, OXFORD, FL 34484
PIN: 402207278003
ALTA/ACSM LAND TITLE SURVEY
PREPARED FOR: COMMERCIAL SITE SOLUTIONS, INC.

SHEET NO.
1
OF 1

LEGEND

PROPOSED	DESCRIPTION
	ASPHALT PAVEMENT DEMOLITION
X	EXISTING ITEM TO BE REMOVED

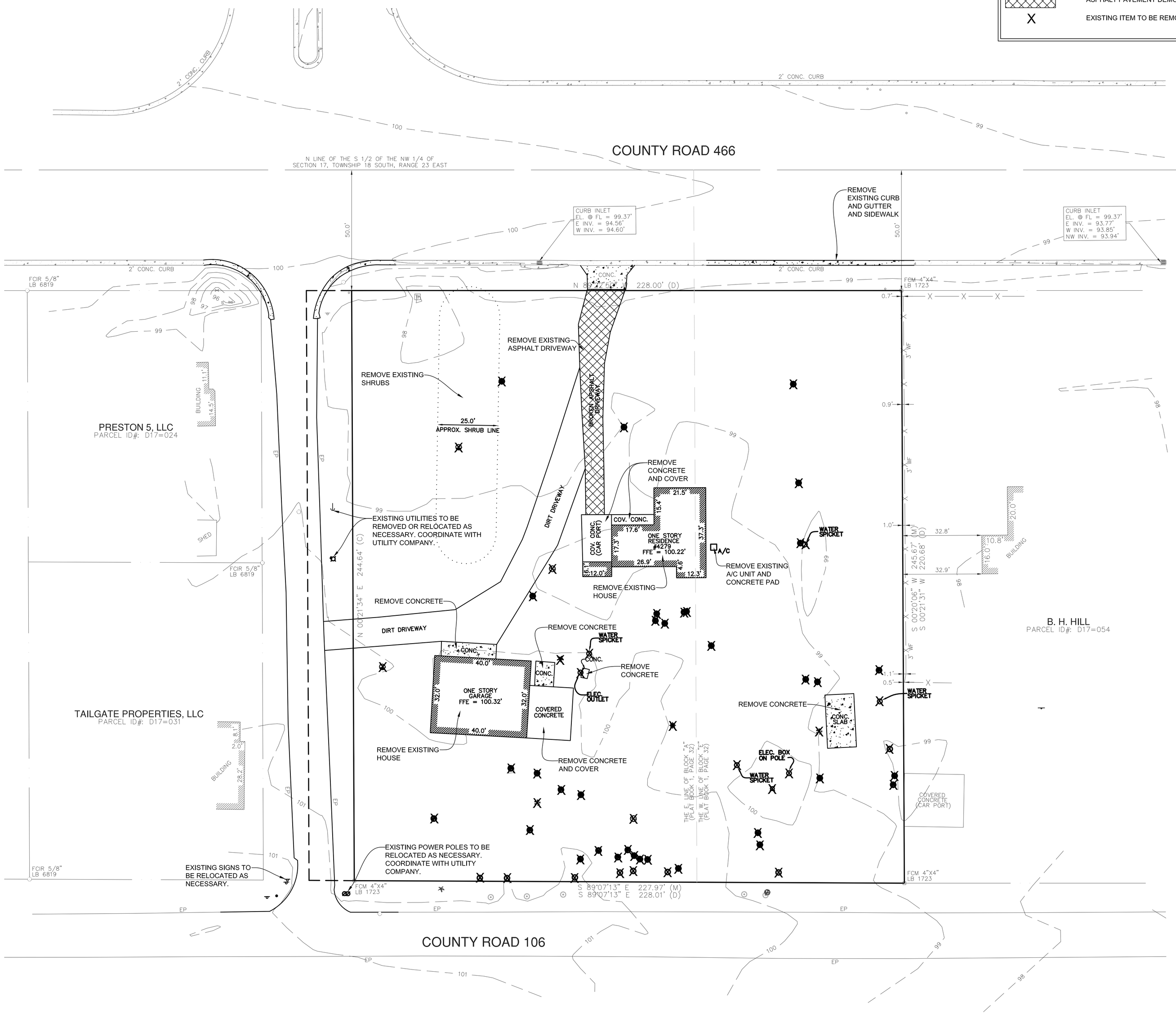

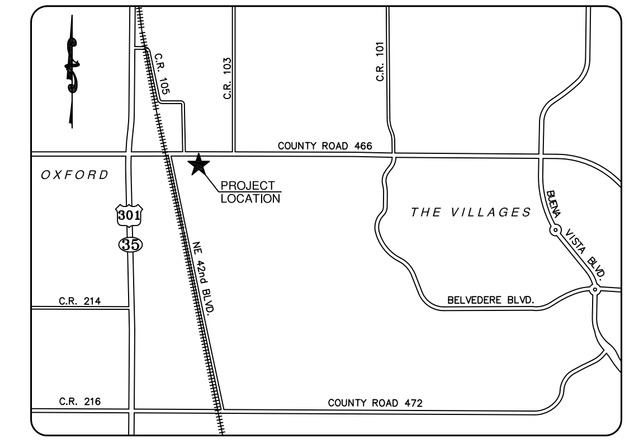

VICINITY MAP
(NOT TO SCALE)

GENERAL DEMOLITION NOTES

A. CONTRACTOR SHALL BE RESPONSIBLE FOR REMOVAL OF THE EXISTING STRUCTURES, RELATED UTILITIES, PAVING, UNDERGROUND STORAGE TANKS AND ANY OTHER EXISTING IMPROVEMENTS AS NOTED, SUCH THAT THE IMPROVEMENTS SHOWN ON THE REMAINING PLANS CAN BE CONSTRUCTED.
B. CONTRACTOR IS TO REMOVE AND DISPOSE OF ALL DEBRIS, RUBBISH AND OTHER MATERIALS RESULTING FROM PREVIOUS AND CURRENT DEMOLITION OPERATIONS. DISPOSAL WILL BE IN ACCORDANCE WITH ALL LOCAL, STATE AND/OR FEDERAL REGULATIONS GOVERNING SUCH OPERATIONS. THE CONTRACTOR IS RESPONSIBLE FOR OBTAINING ALL PERMITS REQUIRED FOR DEMOLITION AND DISPOSAL.
C. THE GENERAL CONTRACTOR SHALL TAKE ALL PRECAUTIONS NECESSARY TO AVOID PROPERTY DAMAGE TO ADJACENT PROPERTIES DURING THE CONSTRUCTION PHASES OF THIS PROJECT. THE CONTRACTOR WILL BE HELD SOLELY RESPONSIBLE FOR ANY DAMAGES TO THE ADJACENT PROPERTIES OCCURRING DURING THE CONSTRUCTION PHASES OF THIS PROJECT.
D. THE CONTRACTOR IS SPECIFICALLY CAUTIONED THAT THE LOCATION AND/OR ELEVATION OF EXISTING UTILITIES AS SHOWN ON THESE PLANS IS BASED ON RECORDS OF THE VARIOUS UTILITY COMPANIES, AND WHERE POSSIBLE, MEASUREMENTS TAKEN IN THE FIELD. THE INFORMATION IS NOT TO BE RELIED ON AS BEING EXACT OR COMPLETE. THE CONTRACTOR MUST CALL THE APPROPRIATE UTILITY COMPANY AT LEAST 72 HOURS BEFORE ANY EXCAVATION TO REQUEST EXACT FIELD LOCATION OF UTILITIES. IF CLEARANCES ARE LESS THAN SPECIFIED ON THE PLAN OR TWELVE INCHES (12"), WHICHEVER IS LESS, CONTACT THE DESIGN ENGINEER AND THE OWNER PRIOR TO PROCEEDING WITH CONSTRUCTION.
E. IF DEMOLITION OR CONSTRUCTION ON SITE WILL INTERFERE WITH THE ADJACENT PROPERTY OWNER'S TRAFFIC FLOW, THE CONTRACTOR SHALL COORDINATE WITH THE ADJACENT PROPERTY OWNER, TO MINIMIZE THE IMPACT ON TRAFFIC FLOW. TEMPORARY RE-ROUTING OF TRAFFIC IS TO BE ACCOMPLISHED BY USING DOT APPROVED TRAFFIC BARRICADES, BARRELS, AND/OR CONES. TEMPORARY SIGNAGE AND FLAGMEN MAY BE ALSO NECESSARY.
F. CONTRACTOR SHALL BEGIN CONSTRUCTION OF ANY LIGHT POLE BASES FOR RELOCATED LIGHT FIXTURES AND RELOCATION OF ELECTRICAL SYSTEM AS SOON AS DEMOLITION BEGINS.
G. INTERRUPTION OF POWER TO ANY LIGHT POLES OR SIGNS SHALL NOT EXCEED 24 HOURS.
H. THE CONTRACTOR SHALL MAINTAIN ALL SANITARY SEWER SERVICES TO ANY "UPSTREAM" FACILITIES AT ALL TIMES. SANITARY SEWER SERVICES SHALL NOT BE INTERRUPTED AT ANY TIME DURING CONSTRUCTION ACTIVITIES.
I. THE CONTRACTOR SHALL BE RESPONSIBLE FOR THE DISCONNECTION OF UTILITY SERVICES TO THE EXISTING BUILDINGS PRIOR TO DEMOLITION OF THE BUILDINGS.
J. ALL EXISTING SEWERS, PIPING AND UTILITIES SHOWN ARE NOT TO BE INTERPRETED AS THE EXACT LOCATION, OR AS THE ONLY OBSTACLES THAT MAY OCCUR ON THE SITE. VERIFY EXISTING CONDITIONS AND PROCEED WITH CAUTION AROUND ANY ANTICIPATED FEATURES. GIVE NOTICE TO ALL UTILITY COMPANIES REGARDING DESTRUCTION AND REMOVAL OF ALL SERVICE LINES AND CAP ALL LINES BEFORE PROCEEDING WITH THE WORK. THE CONTRACTOR SHALL COORDINATE WITH THE UTILITY COMPANY CONCERNING PORTIONS OF WORK WHICH MAY BE PERFORMED BY THE UTILITY COMPANY'S FORCES AND ANY FEES WHICH ARE TO BE PAID TO THE UTILITY COMPANY FOR THEIR SERVICES. THE CONTRACTOR IS RESPONSIBLE FOR PAYING ALL FEES AND CHARGES. UTILITIES DETERMINED TO BE ABANDONED AND LEFT IN PLACE SHALL BE GROUTED IF UNDER BUILDING.
K. CONTRACTOR MUST PROTECT THE PUBLIC AT ALL TIMES WITH FENCING, BARRICADES, ENCLOSURES, ETC., TO THE BEST PRACTICES AND APPROVED BY OWNER/DEVELOPER CONSTRUCTION MANAGER.
L. PRIOR TO DEMOLITION OCCURRING, ALL EROSION CONTROL DEVICES ARE TO BE INSTALLED.
M. THE CONTRACTOR SHALL COORDINATE WATER MAIN WORK WITH CHARLOTTE COUNTY TO PLAN PROPOSED IMPROVEMENTS AND TO ENSURE ADEQUATE FIRE PROTECTION IS CONSTANTLY AVAILABLE TO THE SITE THROUGH OUT THIS SPECIFIC WORK AND THROUGH ALL PHASES OF CONSTRUCTION. CONTRACTOR WILL BE RESPONSIBLE FOR ARRANGING/PROVIDING ANY REQUIRED WATERMAIN SHUT-OFFS WITH CHARLOTTE COUNTY DURING CONSTRUCTION. ANY COSTS ASSOCIATED WITH WATERMAIN SHUT OFFS WILL BE THE RESPONSIBILITY OF THE CONTRACTOR AND NO EXTRA COMPENSATION WILL BE PROVIDED.
N. CONTRACTOR IS TO ENSURE NO DISTURBANCE OCCURS BEYOND THE LIMITS SHOWN ON THIS PLAN.

N

0 20 40 60

SCALE: 1" = 20'

REVISIONS

ISSUED	COMMENT

COMMERCIAL SITE SOLUTIONS, INC.
SITE PLANNING • ENGINEERING
402 EAST 1ST AVENUE
EASLEY, SC 29640
864-855-5200
5032 TAMPA WEST BLVD.
TAMPA, FL 33634
813-885-2052
813-882-4372 (FAX)

PREPARED FOR:
MURPHY OIL USA, INC.
422 NORTH WASHINGTON AVENUE
EL DORADO, AR 71730
PH: 870-875-7629

DEMOLITION PLAN

MURPHY OIL USA
WILDWOOD, FL
EAST COUNTY ROAD 466
WILDWOOD, FL

Date:	5/25/10
Drawn:	MGL
Checked:	---

C-3
Sheet

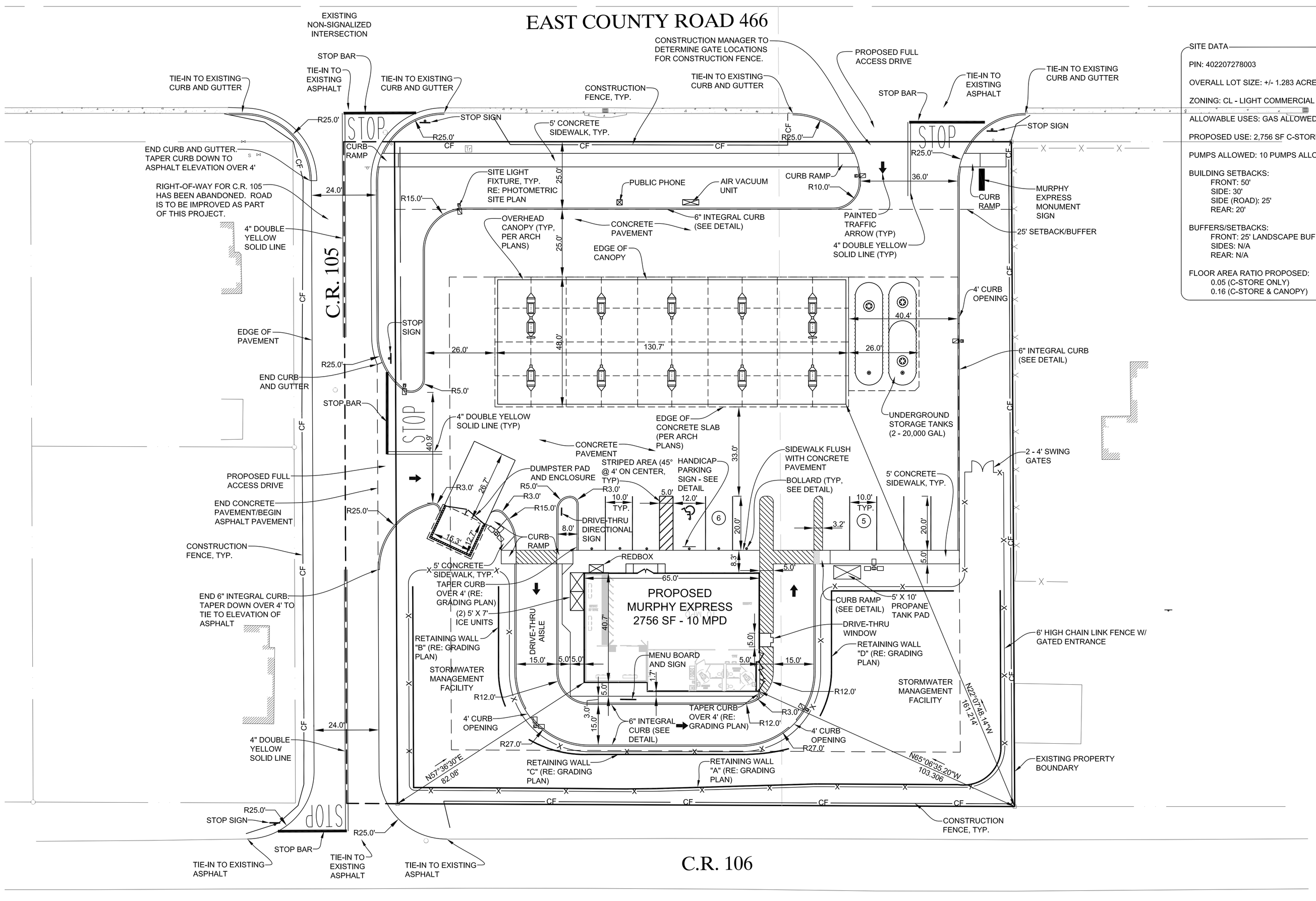

LEGEND

EXISTING	PROPOSED	DESCRIPTION
		CONCRETE CURB & GUTTER
		INTEGRAL CURB
	(6)	NUMBER OF PARKING SPACES PER ROW
		PAINTED TRAFFIC ARROW
		SIGN
		SITE LIGHTING
	—CF—	CONSTRUCTION FENCE (SEE ARCH PLANS FOR DETAIL)

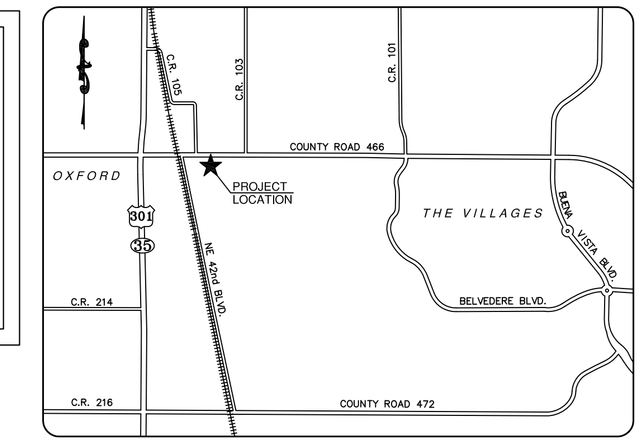

VICINITY MAP
(NOT TO SCALE)

SITE DATA

PIN: 402207278003

OVERALL LOT SIZE: +/- 1.283 ACRES

ZONING: CL - LIGHT COMMERCIAL

ALLOWABLE USES: GAS ALLOWED, C-STORE ALLOWED

PROPOSED USE: 2,756 SF C-STORE W/ 10 PUMPS

PUMPS ALLOWED: 10 PUMPS ALLOWED

BUILDING SETBACKS:
FRONT: 50'
SIDE: 30'
SIDE (ROAD): 25'
REAR: 20'

BUFFERS/SETBACKS:
FRONT: 25' LANDSCAPE BUFFER/SETBACK W/ 5' SIDEWALK
SIDES: N/A
REAR: N/A

FLOOR AREA RATIO PROPOSED:
0.05 (C-STORE ONLY)
0.16 (C-STORE & CANOPY)

NOTE: GENERAL CONTRACTOR TO COORDINATE LOCATION OF CANOPY SIGN AND MONUMENT SIGN WITH MURPHY'S CONSTRUCTION SUPERVISOR.

NOTE: CONTRACTOR SHALL OBTAIN COPY OF EASEMENT DOCUMENTS AND DRIVEWAY/ENCROACHMENT PERMITS PRIOR TO BEGINNING ANY WORK WITHIN THE PUBLIC RIGHT-OF-WAY OR ON ADJACENT PROPERTY.

NOTE: SEE PAVING PLAN FOR CONCRETE PAVEMENT CUTS.

GENERAL SITE NOTES:

A. UNLESS OTHERWISE SHOWN, CALLED OUT OR SPECIFIED HEREON ALL CURB ADJACENT TO PAVEMENT SHALL BE INSTALLED PER PAVING PLAN AND DETAILS. PAVEMENT SHALL BE INSTALLED IN ACCORDANCE WITH THE PAVING PLAN OVER THE ENTIRE SITE AND ALL ACCESS DRIVES. SEE ASSOCIATED PLANS FOR CANOPY, COLUMN, PUMP ISLAND DETAILS AND LAYOUT.

B. CONTRACTOR SHALL BEGIN CONSTRUCTION OF ANY LIGHT POLE BASES FOR RELOCATED LIGHT FIXTURES AND RELOCATION OF ELECTRICAL SYSTEM AS SOON AS DEMOLITION BEGINS. CONTRACTOR SHALL BE AWARE THAT INTERRUPTION OF POWER TO ANY LIGHT POLES OR SIGNS SHALL NOT EXCEED 24 HOURS.

C. IF DEMOLITION OR CONSTRUCTION ON SITE WILL INTERFERE WITH THE SHOPPING CENTER TRAFFIC FLOW OR ADJACENT PROPERTY OWNER'S TRAFFIC FLOW, THE CONTRACTOR SHALL COORDINATE WITH THE SHOPPING CENTER MANAGER/OWNER AND/OR ADJACENT PROPERTY OWNER, TO MINIMIZE THE IMPACT ON TRAFFIC FLOW. TEMPORARY RE-ROUTING OF TRAFFIC IS TO BE ACCOMPLISHED BY USING DOT APPROVED TRAFFIC BARRICADES, BARRELS, AND/OR CONES. TEMPORARY SIGNAGE AND FLAGMEN MAY BE ALSO NECESSARY.

D. CONTRACTOR TO REFER TO THESE PLANS FOR ALL LANDSCAPE AND IRRIGATION WORK.

E. CONTRACTOR TO PROTECT EXISTING LANDSCAPE/IRRIGATION MATERIAL.

F. ALL SLOPES AND AREAS DISTURBED BY CONSTRUCTION SHALL BE GRADED SMOOTH AND FOUR INCHES OF TOPSOIL APPLIED. IF ADEQUATE TOPSOIL IS NOT AVAILABLE ON SITE, THE CONTRACTOR SHALL PROVIDE TOPSOIL, APPROVED BY THE OWNER, AS NEEDED. THE AREA SHALL THEN BE SEEDED/SODDED, FERTILIZED, MULCHED, WATERED AND MAINTAINED UNTIL HARDY GRASS GROWTH IS ESTABLISHED IN ALL AREAS. ANY AREAS DISTURBED FOR ANY REASON PRIOR TO FINAL ACCEPTANCE OF THE PROJECT SHALL BE CORRECTED BY THE CONTRACTOR AT NO ADDITIONAL COST TO THE OWNER.

G. THE LOCATION OF THE CONSTRUCTION FENCE ON THE DRAWINGS IS FOR GRAPHICAL REPRESENTATION ONLY. THE CONTRACTOR IS TO ENSURE THAT THE CONSTRUCTION FENCE ENCOMPASSES THE ENTIRE WORK AREA.

H. ALL DIMENSIONS, UNLESS OTHERWISE NOTED, ARE TO FACE OF CURB, FACE OF BUILDING (BLOCK), OR CENTERLINE OF PARKING BAY. REFER TO ARCHITECTURAL PLANS FOR EXACT LOCATIONS OF ALL ENTRY/EXIT PORCHES AND PRECISE BUILDING DIMENSIONS.

I. REFER TO PAVING PLAN FOR ALL PAVEMENT TYPES AND LOCATIONS.

J. ALL HANDICAP SPACES ARE TO RECEIVE A HANDICAP SIGN AND SYMBOL PAINTED ON THE CONCRETE. STALL(S) ARE TO RECEIVE A "VAN ACCESSIBLE" SIGN IN ADDITION TO THE ABOVE. STRIPING TO BE BLUE.

K. UNLESS OTHERWISE NOTED, ALL ON-SITE CURB SHALL BE INTEGRAL CURB AS SHOWN ON THE DETAIL SHEET.

L. STOP SIGNS SHALL MEET THE CRITERIA OF THE FLORIDA DEPARTMENT OF TRANSPORTATION AND MANUAL ON UNIFORM TRAFFIC CONTROL DEVICES.

M. THE EARTHWORK FOR ALL BUILDING FOUNDATIONS AND SLABS SHALL BE IN ACCORDANCE WITH THE GEOTECHNICAL REPORT AND ARCHITECTURAL BUILDING PLANS AND SPECIFICATIONS.

N. THE GENERAL CONTRACTOR IS TO COORDINATE WITH THE APPROPRIATE UTILITY COMPANIES PRIOR TO CONSTRUCTION, ADJUSTMENT, OR RELOCATION OF EXISTING UTILITIES AS DESIGNATED ON THE PLANS.

O. THE CONTRACTOR IS RESPONSIBLE FOR REPAIRING DAMAGE TO ANY EXISTING ITEM DURING CONSTRUCTION SUCH AS, BUT NOT LIMITED TO, DRAINAGE, UTILITIES, PAVEMENT, STRIPING, CURB, ETC. REPAIRS SHALL BE EQUAL TO OR BETTER THAN EXISTING CONDITIONS. THE CONTRACTOR IS RESPONSIBLE TO DOCUMENT ALL EXISTING DAMAGE AND NOTIFY CONSTRUCTION MANAGER PRIOR TO CONSTRUCTION START.

N

0 20 40 60
SCALE: 1" = 20'

REVISIONS

ISSUED	COMMENT

COMMERCIAL SITE SOLUTIONS, INC.
SITE PLANNING • ENGINEERING
402 EAST 1ST AVENUE
EASLEY, SC 29640
864-855-5200
5032 TAMPA WEST BLVD.
TAMPA, FL 33634
813-885-2052
813-882-4372 (FAX)

PREPARED FOR:
MURPHY OIL USA, INC.
422 NORTH WASHINGTON AVENUE
EL DORADO, AR 71730
PH: 870-875-7629

SITE PLAN
MURPHY OIL USA
WILDWOOD, FL
EAST COUNTY ROAD 466
WILDWOOD, FL

Date:	5/25/10
Drawn:	MGL
Checked:	---

C-4
Sheet

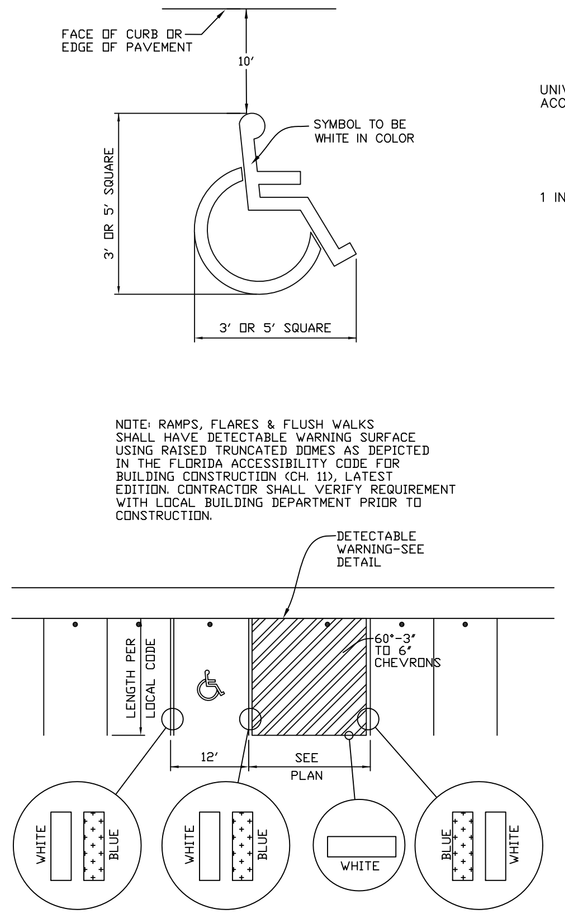

NOTE: RAMPS, FLARES & FLUSH WALKS SHALL HAVE DETECTABLE WARNING SURFACE USING RAISED TRUNCATED DOMES AS DEPICTED IN THE FLORIDA ACCESSIBILITY CODE FOR BUILDING CONSTRUCTION (CH. 11), LATEST EDITION. CONTRACTOR SHALL VERIFY REQUIREMENT WITH LOCAL BUILDING DEPARTMENT PRIOR TO CONSTRUCTION.

TYPICAL ACCESSIBLE SPACE LAYOUT

N.T.S.

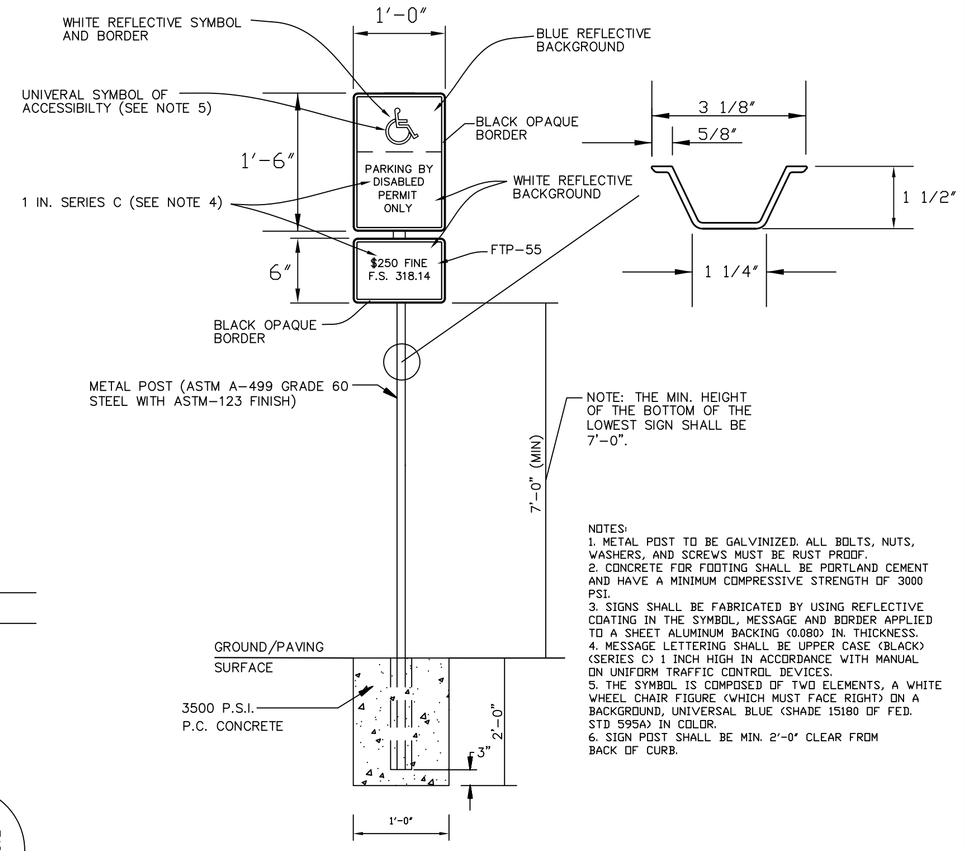

NOTE: THE MIN. HEIGHT OF THE BOTTOM OF THE LOWEST SIGN SHALL BE 7'-0".

NOTES:
1. METAL POST TO BE GALVINIZED. ALL BOLTS, NUTS, WASHERS, AND SCREWS MUST BE RUST PROOF.
2. CONCRETE FOR FOOTING SHALL BE PORTLAND CEMENT AND HAVE A MINIMUM COMPRESSIVE STRENGTH OF 3000 PSI.
3. SIGNS SHALL BE FABRICATED BY USING REFLECTIVE COATING IN THE SYMBOL, MESSAGE AND BORDER APPLIED TO A SHEET ALUMINUM BACKING (0.080) IN. THICKNESS.
4. MESSAGE LETTERING SHALL BE UPPER CASE (BLACK) (SERIES C) 1 INCH HIGH IN ACCORDANCE WITH MANUAL ON UNIFORM TRAFFIC CONTROL DEVICES.
5. THE SYMBOL IS COMPOSED OF TWO ELEMENTS, A WHITE WHEEL CHAIR FIGURE (WHICH MUST FACE RIGHT) ON A BACKGROUND, UNIVERSAL BLUE (SHADE 15180 OF FED. STD 595A) IN COLOR.
6. SIGN POST SHALL BE MIN. 2'-0" CLEAR FROM BACK OF CURB.

ACCESSIBLE SIGN AND POST DETAIL

N.T.S.

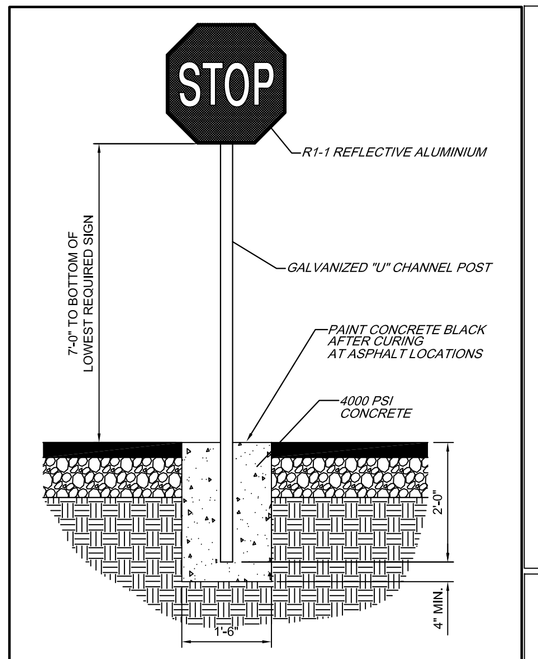

STOP SIGN DETAIL

(N.T.S.)

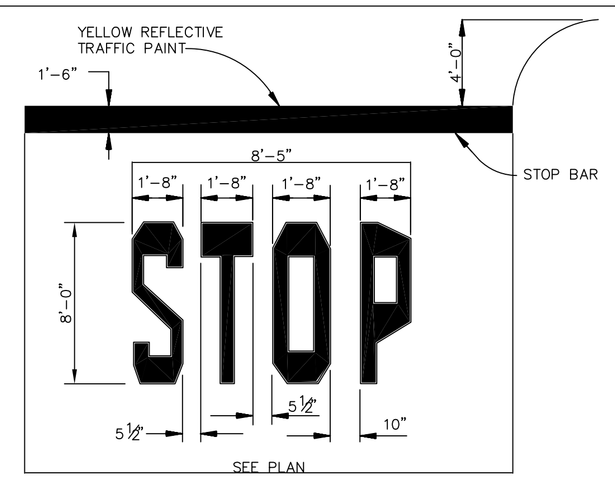

STOP BAR

N.T.S.

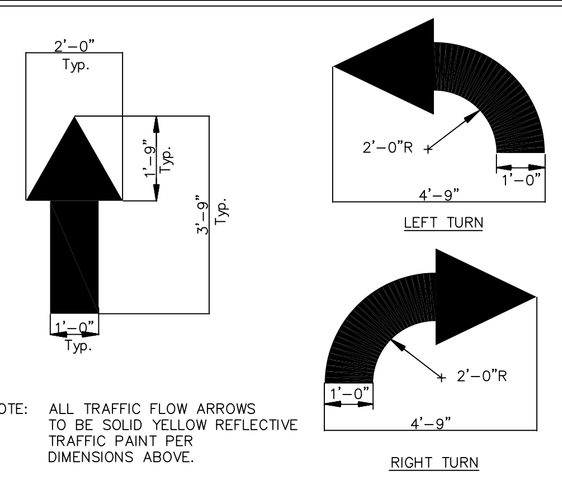

NOTE: ALL TRAFFIC FLOW ARROWS TO BE SOLID YELLOW REFLECTIVE TRAFFIC PAINT PER DIMENSIONS ABOVE.

TRAFFIC FLOW ARROW

N.T.S.

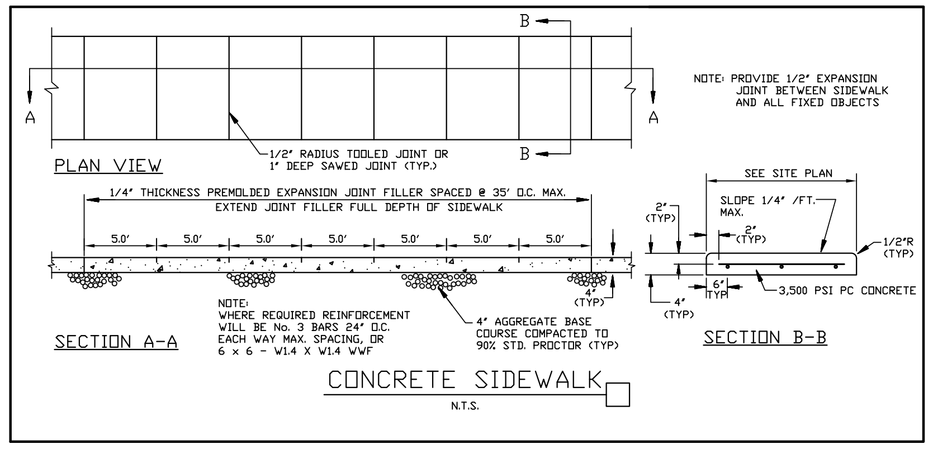

NOTE: PROVIDE 1/2" EXPANSION JOINT BETWEEN SIDEWALK AND ALL FIXED OBJECTS

CONCRETE SIDEWALK

N.T.S.

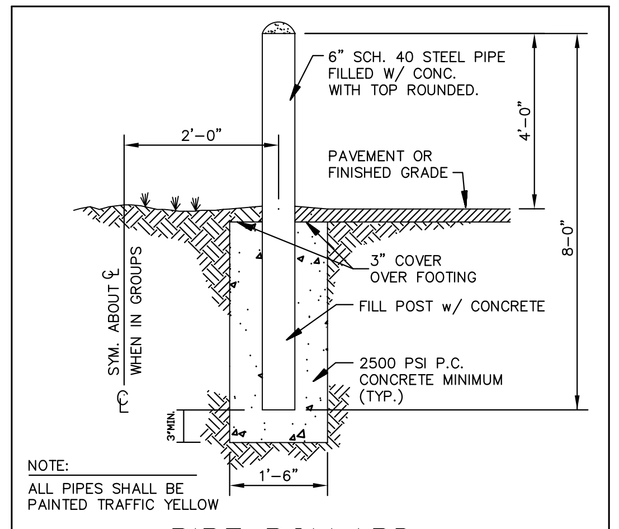

NOTE: ALL PIPES SHALL BE PAINTED TRAFFIC YELLOW

PIPE BOLLARD

N.T.S.

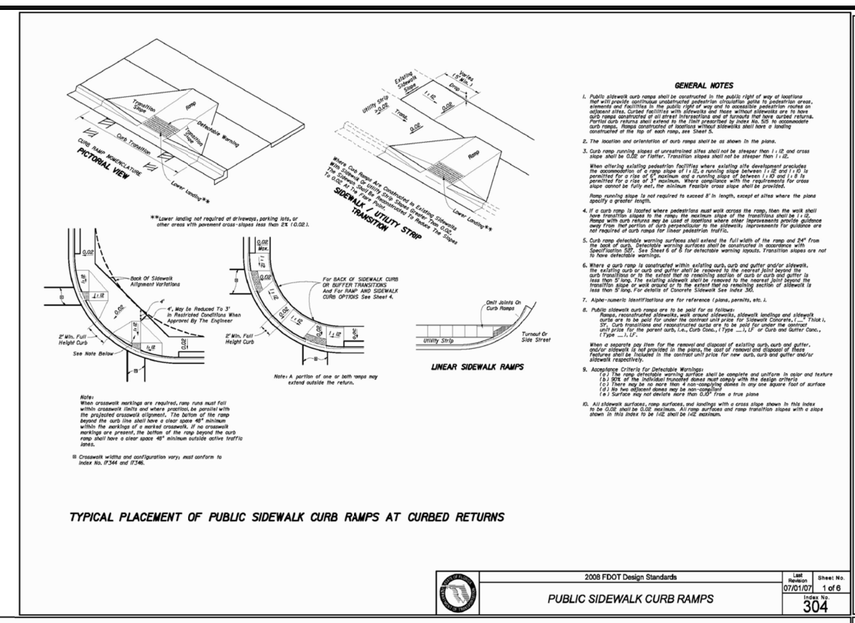

GENERAL NOTES

TYPICAL PLACEMENT OF PUBLIC SIDEWALK CURB RAMPS AT CURBED RETURNS

LINEAR SIDEWALK RAMPS

2008 FDOT Design Standards — PUBLIC SIDEWALK CURB RAMPS — Sheet No. 304

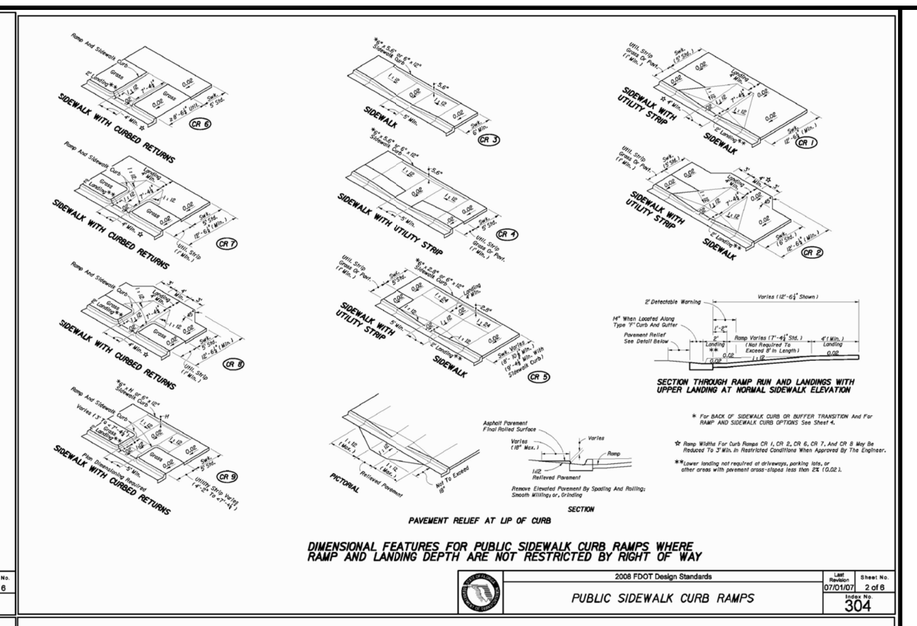

SECTION THROUGH RAMP RUN AND LANDINGS WITH UPPER LANDING AT NORMAL SIDEWALK ELEVATION

PAVEMENT RELIEF AT LIP OF CURB

DIMENSIONAL FEATURES FOR PUBLIC SIDEWALK CURB RAMPS WHERE RAMP AND LANDING DEPTH ARE NOT RESTRICTED BY RIGHT OF WAY

2008 FDOT Design Standards — PUBLIC SIDEWALK CURB RAMPS — Sheet No. 304

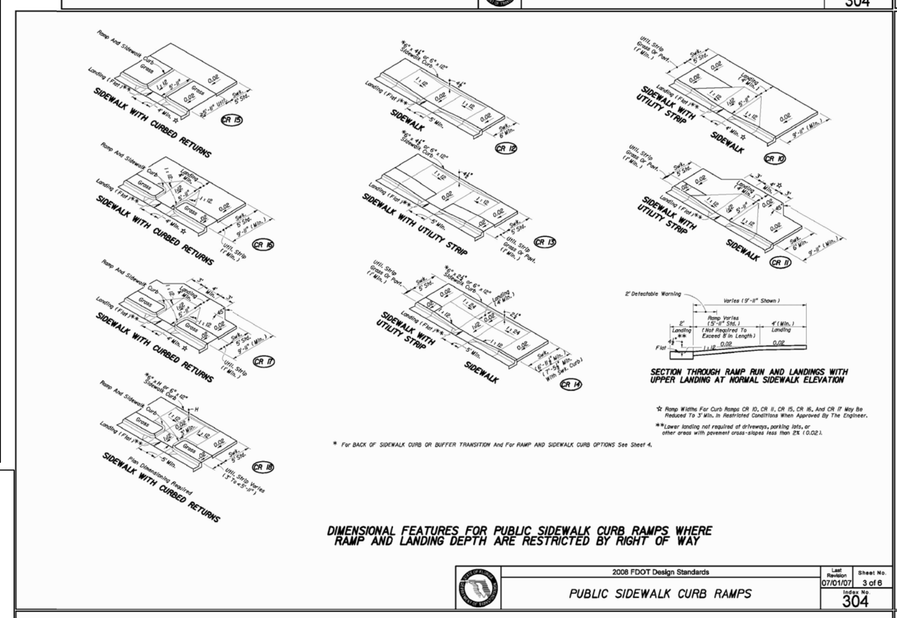

SECTION THROUGH RAMP RUN AND LANDINGS WITH UPPER LANDING AT NORMAL SIDEWALK ELEVATION

DIMENSIONAL FEATURES FOR PUBLIC SIDEWALK CURB RAMPS WHERE RAMP AND LANDING DEPTH ARE RESTRICTED BY RIGHT OF WAY

2008 FDOT Design Standards — PUBLIC SIDEWALK CURB RAMPS — Sheet No. 304

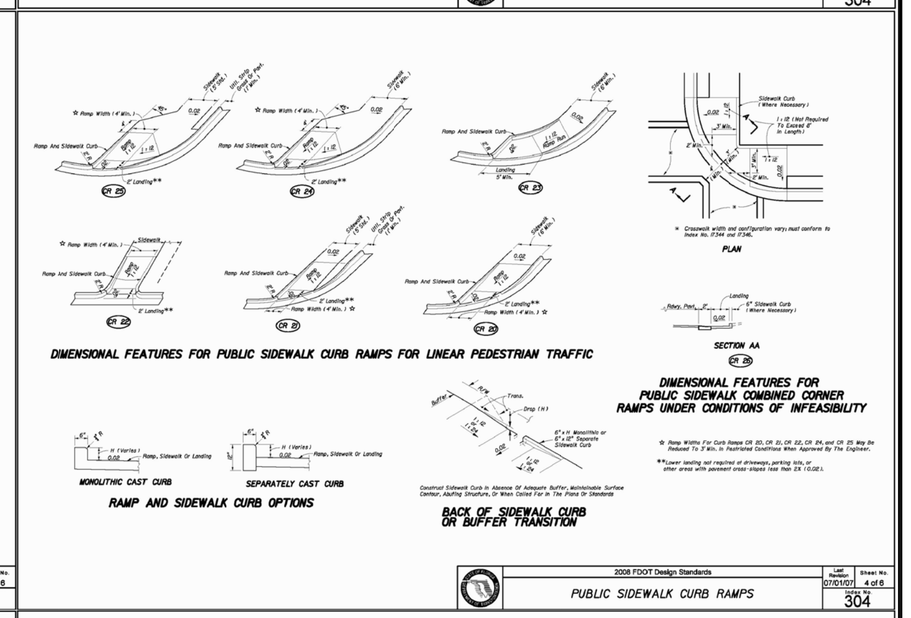

DIMENSIONAL FEATURES FOR PUBLIC SIDEWALK CURB RAMPS FOR LINEAR PEDESTRIAN TRAFFIC

DIMENSIONAL FEATURES FOR PUBLIC SIDEWALK COMBINED CORNER RAMPS UNDER CONDITIONS OF INFEASIBILITY

MONOLITHIC CAST CURB — SEPARATELY CAST CURB

RAMP AND SIDEWALK CURB OPTIONS

BACK OF SIDEWALK CURB OR BUFFER TRANSITION

2008 FDOT Design Standards — PUBLIC SIDEWALK CURB RAMPS — Sheet No. 304

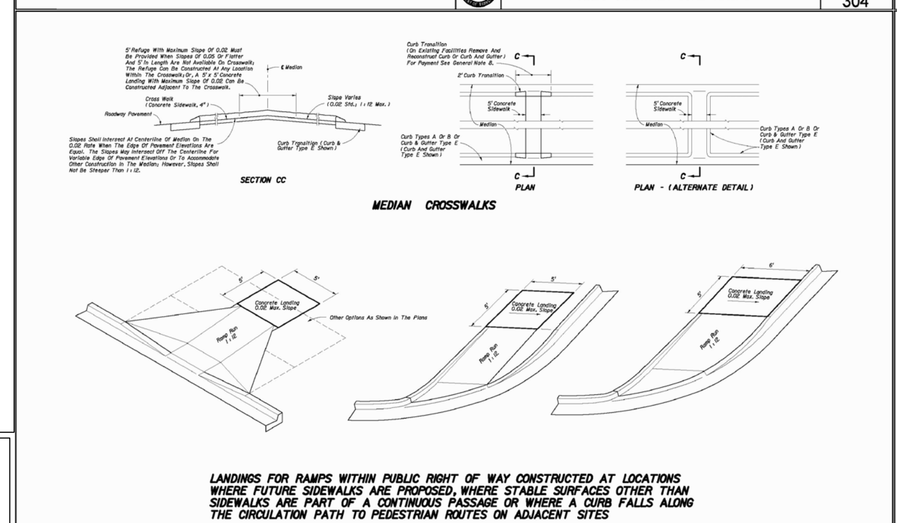

MEDIAN CROSSWALKS

LANDINGS FOR RAMPS WITHIN PUBLIC RIGHT OF WAY CONSTRUCTED AT LOCATIONS WHERE FUTURE SIDEWALKS ARE PROPOSED, WHERE STABLE SURFACES OTHER THAN SIDEWALKS ARE PART OF A CONTINUOUS PASSAGE OR WHERE A CURB FALLS ALONG THE CIRCULATION PATH TO PEDESTRIAN ROUTES ON ADJACENT SITES

2008 FDOT Design Standards — PUBLIC SIDEWALK CURB RAMPS — Sheet No. 304

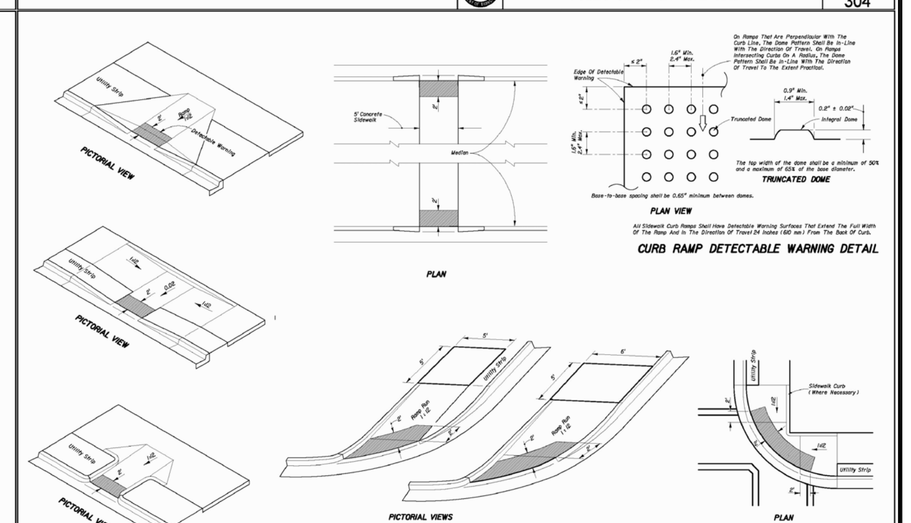

CURB RAMP DETECTABLE WARNING DETAIL

TYPICAL PLACEMENT OF DETECTABLE WARNING ON CURB RAMPS

2008 FDOT Design Standards — PUBLIC SIDEWALK CURB RAMPS — Sheet No. 304

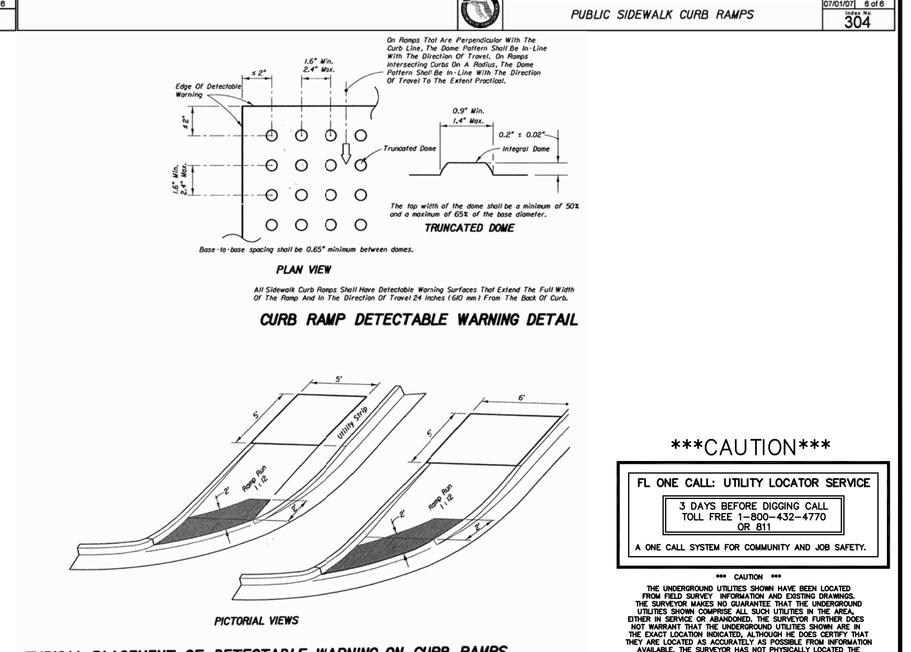

CURB RAMP DETECTABLE WARNING DETAIL

TYPICAL PLACEMENT OF DETECTABLE WARNING ON CURB RAMPS

CAUTION

FL ONE CALL: UTILITY LOCATOR SERVICE
3 DAYS BEFORE DIGGING CALL TOLL FREE 1-800-432-4770 OR 811
A ONE CALL SYSTEM FOR COMMUNITY AND JOB SAFETY.

*** CAUTION ***
THE UNDERGROUND UTILITIES SHOWN HAVE BEEN LOCATED FROM FIELD SURVEY INFORMATION AND EXISTING DRAWINGS. THE SURVEYOR MAKES NO GUARANTEE THAT THE UNDERGROUND UTILITIES SHOWN COMPRISE ALL SUCH UTILITIES IN THE AREA, EITHER IN SERVICE OR ABANDONED. THE SURVEYOR FURTHER DOES NOT WARRANT THAT THE UNDERGROUND UTILITIES SHOWN ARE IN THE EXACT LOCATION INDICATED, ALTHOUGH HE DOES CERTIFY THAT THEY ARE LOCATED AS ACCURATELY AS POSSIBLE FROM INFORMATION AVAILABLE. THE SURVEYOR HAS NOT PHYSICALLY LOCATED THE UNDERGROUND UTILITIES.

REVISIONS

ISSUED	COMMENT

SCOTT K. STANNARD, P.E.
FL PE NO. 50565

COMMERCIAL SITE SOLUTIONS, INC.
SITE PLANNING • ENGINEERING
402 EAST 1ST AVENUE
EASLEY, SC 29640
864-855-5200
1616 cE. BEARSS AVE.
TAMPA, FL 33549
813-885-2032

PREPARED FOR:
MURPHY OIL USA, INC.
422 NORTH WASHINGTON AVENUE
EL DORADO, AR 71730
PH: 870-875-7629

SITE DETAILS

MURPHY OIL USA
WILDWOOD, FL
EAST COUNTY ROAD 466
WILDWOOD, FL

Date:	5/25/10
Drawn:	RSM
Checked:	MGL

C-5
Sheet

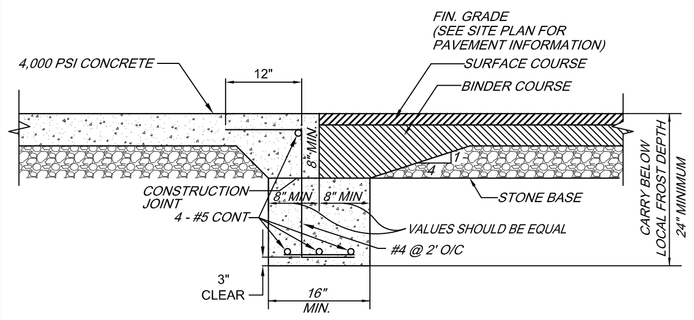

CONCRETE/ASPHALT JOINT DETAIL
(N.T.S.)

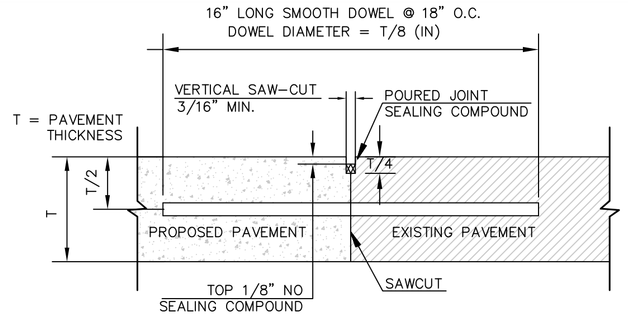

NOTE:
1. DOWEL BARS SHALL BE DRILLED INTO PAVEMENT HORIZONTALLY BY USE OF A MECHANICAL RIG.
2. DRILLING BY HAND IS NOT ACCEPTABLE, PUSHING DOWEL BARS INTO GREEN CONCRETE IS NOT ACCEPTABLE.

BUTT JOINT

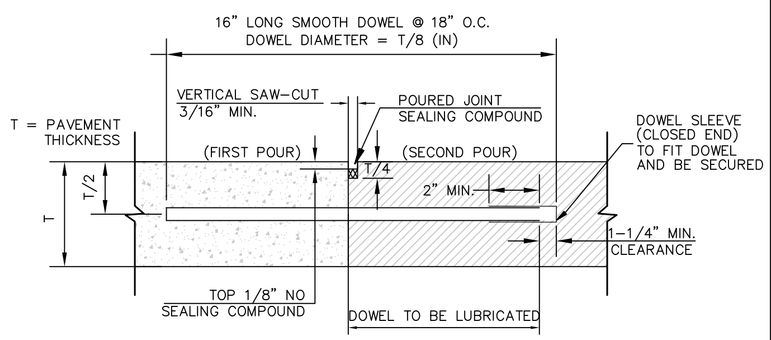

NOTE:
1. DOWELS SHALL BE SUPPORTED BY AN APPROVED DEVICE.

CONSTRUCTION JOINT

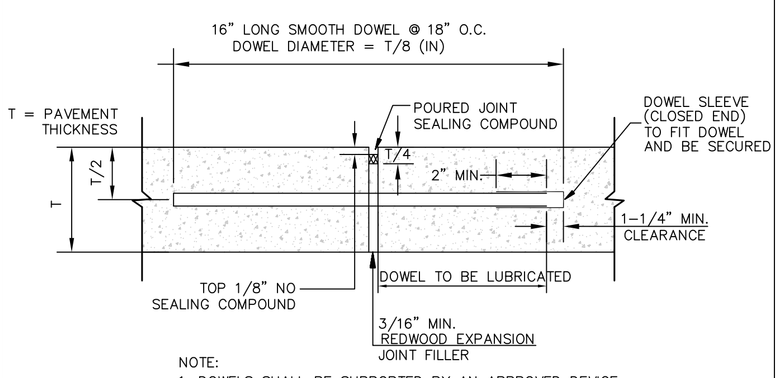

NOTE:
1. DOWELS SHALL BE SUPPORTED BY AN APPROVED DEVICE.

TRANSVERSE EXPANSION JOINT

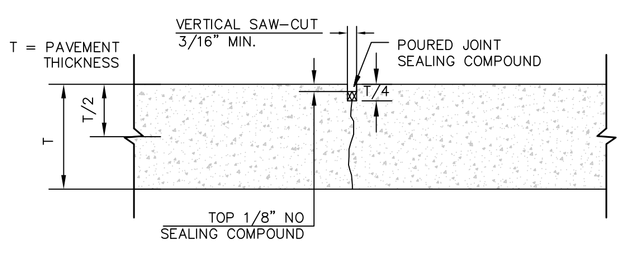

CONTRACTION JOINT

CONCRETE JOINT DETAILS
N.T.S.

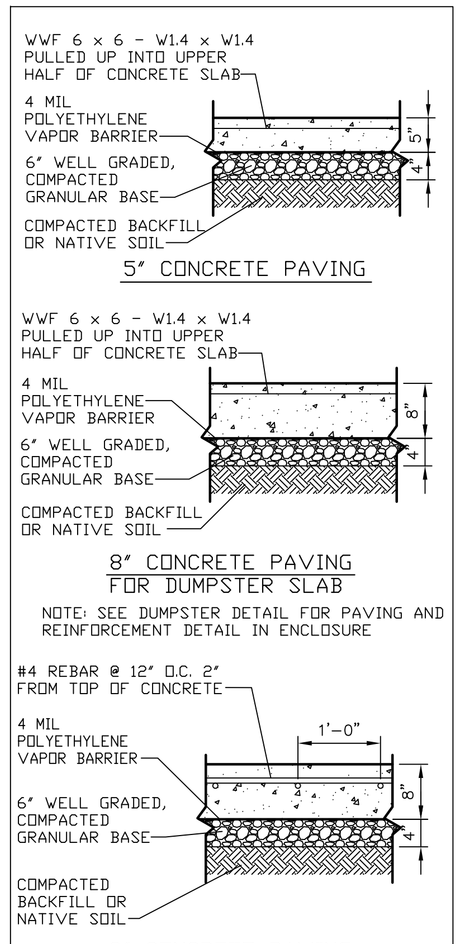

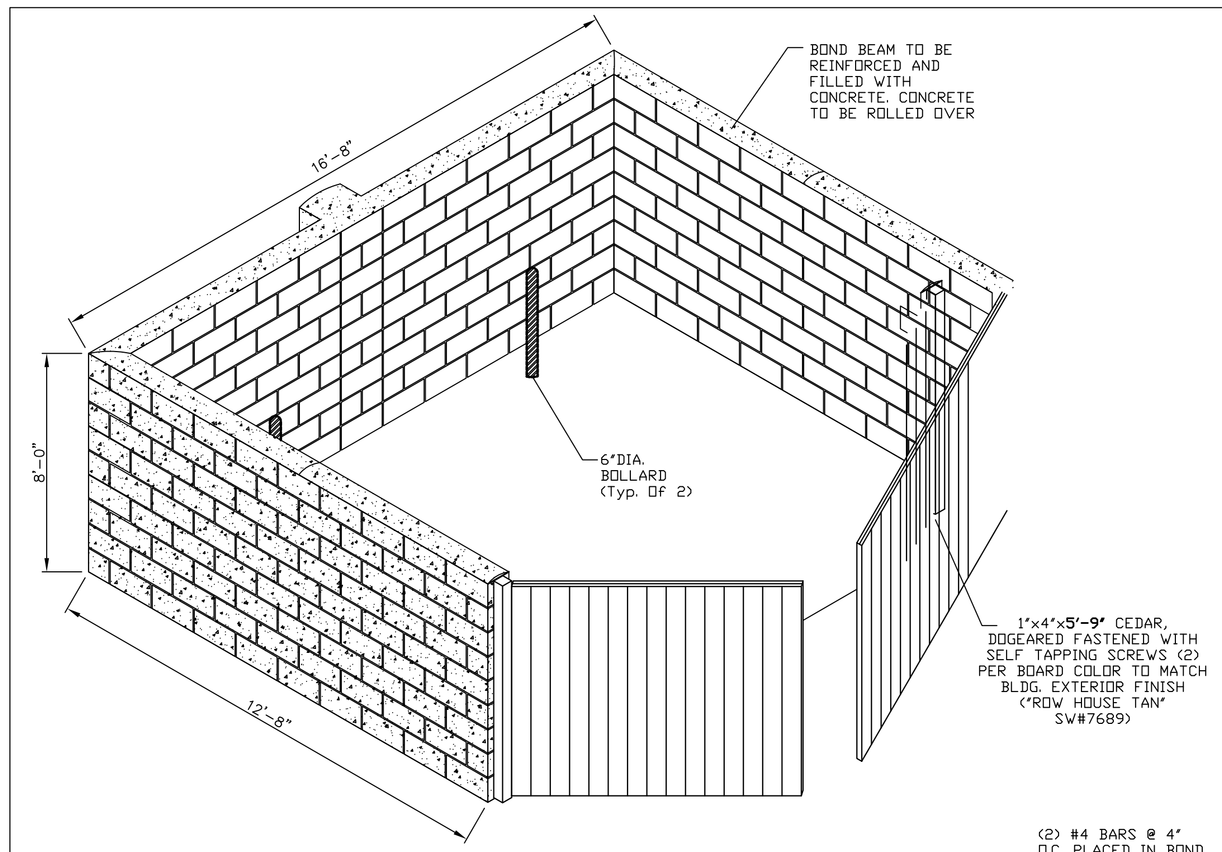

Ⓐ MASONRY BLOCK DUMPSTER ENCLOSURE
SCALE: NTS
DESIGN WIND SPEED: 130 M.P.H.

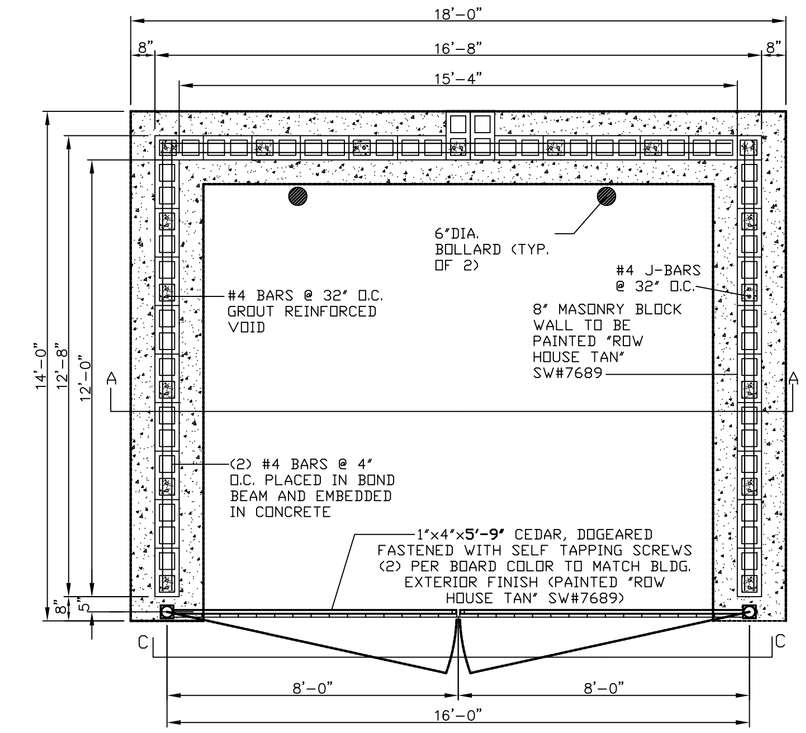

SECTION B
DUMPSTER FOUNDATION PLAN
SCALE: NTS

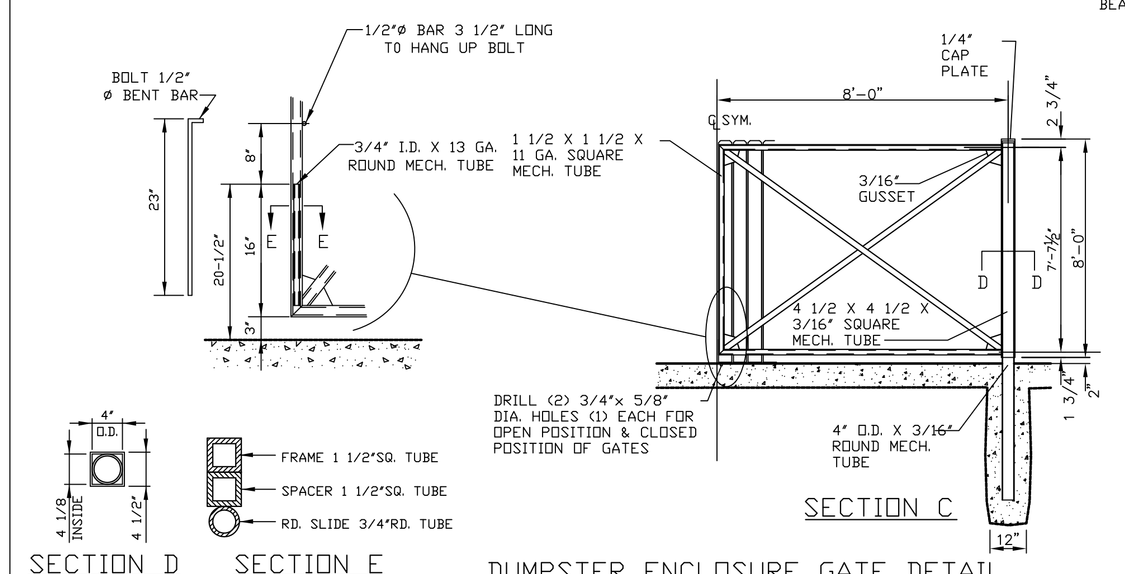

SECTION D SECTION E SECTION C
DUMPSTER ENCLOSURE GATE DETAIL
SCALE: NTS

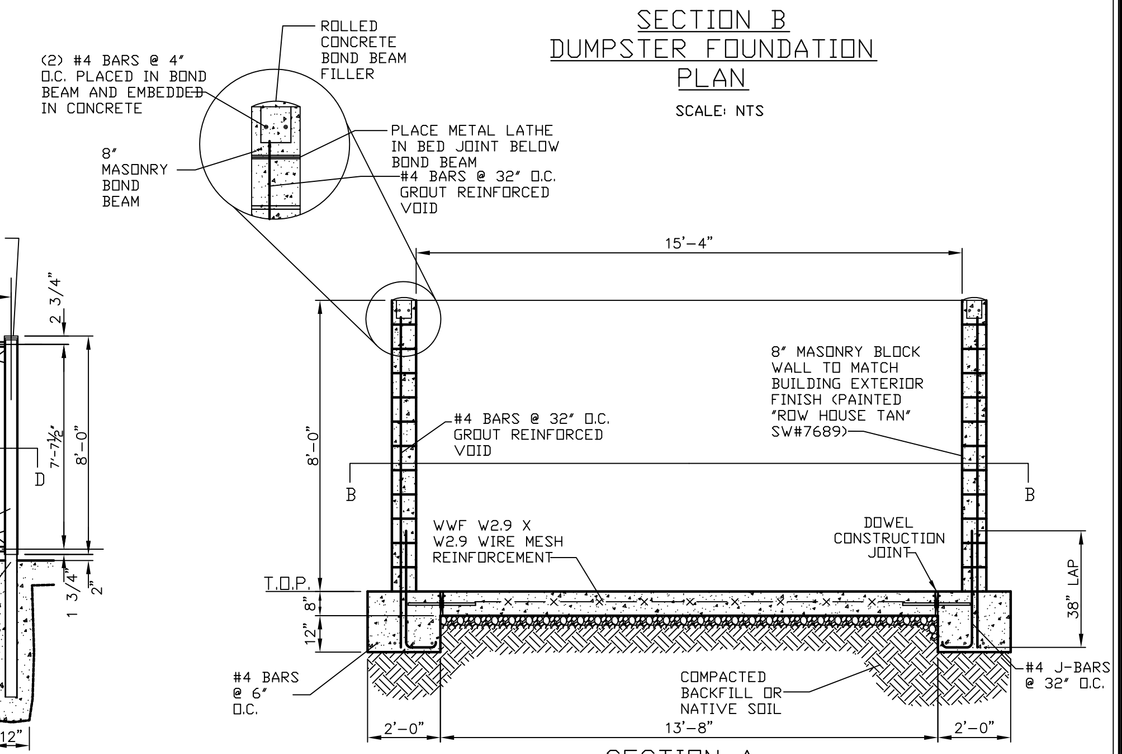

SECTION A
DUMPSTER FOUNDATION SECTION
SCALE: NTS

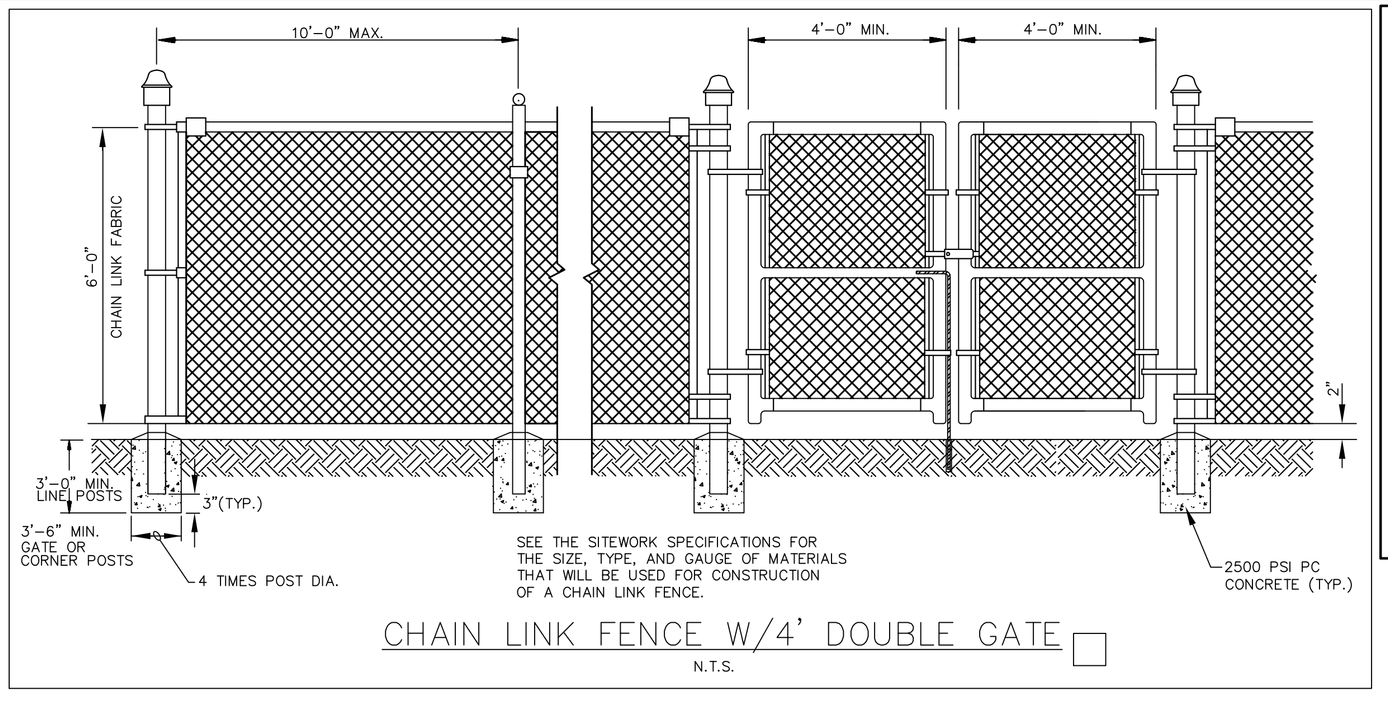

CHAIN LINK FENCE W/4' DOUBLE GATE
N.T.S.

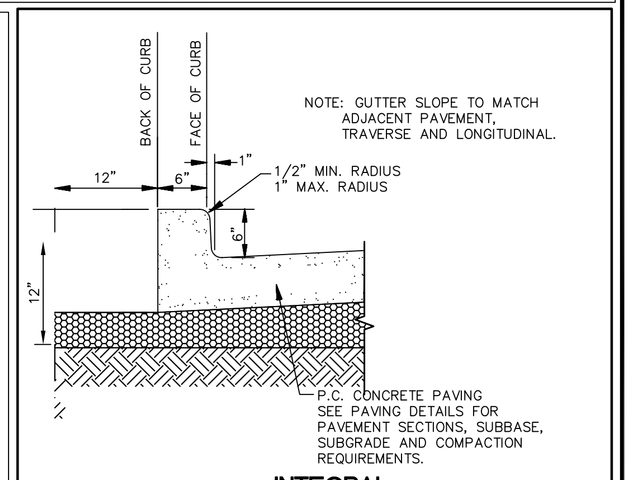

INTEGRAL CURB AND GUTTER
N.T.S.

CAUTION

FL ONE CALL: UTILITY LOCATOR SERVICE
3 DAYS BEFORE DIGGING CALL TOLL FREE 1-800-432-4770 OR 811
A ONE CALL SYSTEM FOR COMMUNITY AND JOB SAFETY.

*** CAUTION ***
THE UNDERGROUND UTILITIES SHOWN HAVE BEEN LOCATED FROM FIELD SURVEY INFORMATION AND EXISTING DRAWINGS. THE SURVEYOR MAKES NO GUARANTEE THAT THE UNDERGROUND UTILITIES SHOWN COMPRISE ALL SUCH UTILITIES IN THE AREA, EITHER IN SERVICE OR ABANDONED. THE SURVEYOR FURTHER DOES NOT WARRANT THAT THE UNDERGROUND UTILITIES SHOWN ARE IN THE EXACT LOCATION INDICATED ALTHOUGH IT IS CERTAIN THAT THEY ARE LOCATED AS ACCURATELY AS POSSIBLE FROM INFORMATION AVAILABLE. THE SURVEYOR HAS NOT PHYSICALLY LOCATED THE UNDERGROUND UTILITIES.

REVISIONS

ISSUED	COMMENT

SCOTT K. STANNARD, P.E.
FL PE NO. 50565

COMMERCIAL SITE SOLUTIONS, INC.
SITE PLANNING • ENGINEERING
402 EAST 1ST AVENUE
EASLEY, SC 29640
864-855-5200
1616 cE. BEARSS AVE.
TAMPA, FL 33549
813-885-2032

PREPARED FOR:
MURPHY OIL USA, INC.
422 NORTH WASHINGTON AVENUE
EL DORADO, AR 71730
PH: 870-875-7629

SITE DETAILS
MURPHY OIL USA
WILDWOOD, FL
EAST COUNTY ROAD 466
WILDWOOD, FL

Date: 5/25/10
Drawn: RSM
Checked: MGL

C-6
Sheet

STORMDRAIN STRUCTURE TABLE		
STRUCTURE	TYPE	RIM ELEV
1	FLARED END SECTION	N/A
2	YARD INLET	98.5
3	COMBINATION INLET	98.75
4	COMBINATION INLET	99.25

STORMDRAIN SCHEDULE						
STRUCTURES	SIZE	LENGTH	TYPE	SLOPE	IE DOWN	IE UP
2 TO 1	18"	99'	RCP (CLASS III)	0.5%	96.00	96.50
3 TO 2	12"	73'	RCP (CLASS III)	0.5%	96.60	95.97
4 TO 2	15"	30'	RCP (CLASS III)	0.5%	96.60	96.75

LEGEND

EXISTING	PROPOSED	DESCRIPTION
95	79.0	CONTOUR LINE
	79.0	SPOT ELEVATION TC = TOP OF CURB BC = BOTTOM OF CURB TOI = TOP OF ISLAND TW = TOP OF WALL BW = BOTTOM OF WALL
		STORM DRAIN INLET
		STORM DRAIN MANHOLE
15"RCP		STORM DRAIN PIPE

CONTRAGTOR SHALL COMPLY COMPLETELY WITH THE LATEST STANDARDS OF OSHA DIRECTIVES OR ANY OTHER AGENCY HAVING JURISDICTION FOR EXCAVATION AND TRENCHING PROCEDURES. THE CONTRACTOR SHALL USE SUPPORT SYSTEMS, SLOPING, BENCHING AND OTHER MEANS OF PROTECTION. THIS IS TO INCLUDE, BUT NOT LIMITED FOR ACCESS AND EGRESS FROM ALL EXCAVATION AND TRENCHING. CONTRACTOR IS RESPONSIBLE FOR COMPLYING WITH PERFORMANCE CRITERIA AS REQUIRED BY OSHA.

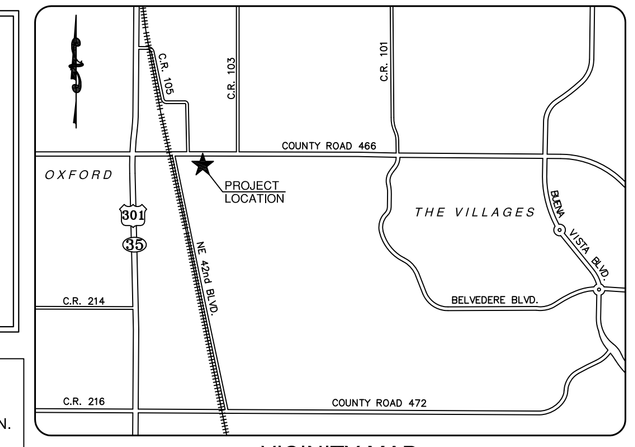

VICINITY MAP
(NOT TO SCALE)

SITE SOILS
KENDRICK FINE SAND, 0-5% SLOPES - HYDROLOGIC SOIL GROUP A

NOTE: SEE EROSION CONTROL DETAILS FOR RIPRAP APRON DESIGN

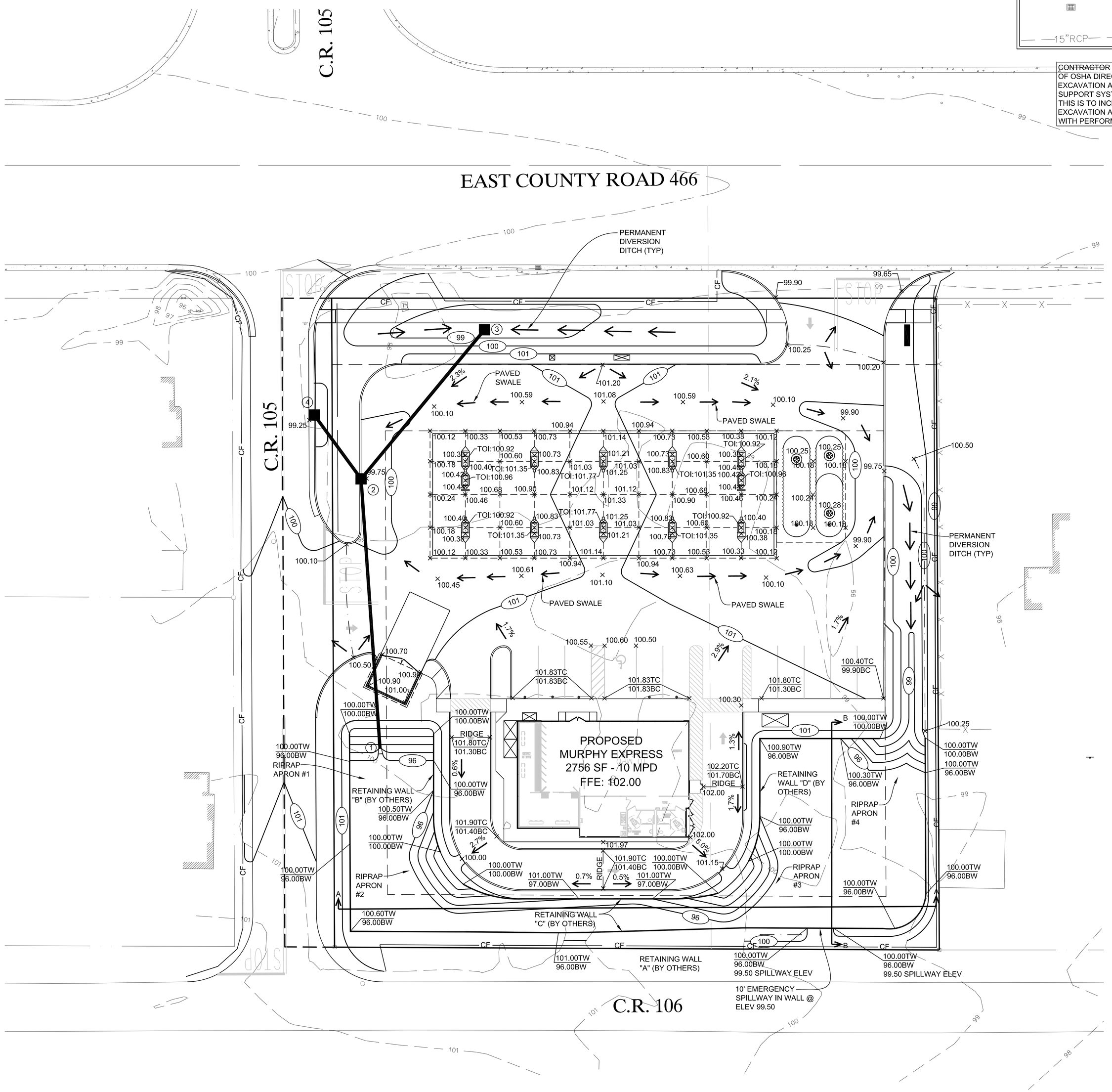

SITE GRADING NOTES

1. CONTRACTOR IS RESPONSIBLE FOR DEMOLITION OF EXISTING STRUCTURES INCLUDING REMOVAL OF ANY EXISTING UTILITIES SERVING THE STRUCTURE. UTILITIES ARE TO BE REMOVED TO THE RIGHT-OF-WAY.

2. THE CONTRACTOR IS SPECIFICALLY CAUTIONED THAT THE LOCATION AND/OR ELEVATION OF EXISTING UTILITIES AS SHOWN ON THESE PLANS IS BASED ON RECORDS OF THE VARIOUS UTILITY COMPANIES. AND WHERE POSSIBLE, MEASUREMENTS TAKEN IN THE FIELD. THE INFORMATION IS NOT TO BE RELIED ON AS BEING EXACT OR COMPLETE. THE CONTRACTOR MUST CALL THE APPROPRIATE UTILITY COMPANIES AT LEAST 72 HOURS BEFORE ANY EXCAVATION TO REQUEST EXACT FIELD LOCATION OF UTILITIES. IT SHALL BE THE RESPONSIBILITY OF THE CONTRACTOR TO RELOCATE ALL EXISTING UTILITIES WHICH CONFLICT WITH THE PROPOSED IMPROVEMENTS SHOWN ON THE PLANS.

3. ALL CUT OR FILL SLOPES SHALL BE 3:1 OR FLATTER UNLESS OTHERWISE NOTED.

4. PRECAST STRUCTURES MAY BE USED AT CONTRACTORS OPTION.

5. STORM PIPE SHALL BE AS FOLLOWS UNLESS OTHERWISE NOTED: TYPE 1: RCP, CLASS III PER ASTM C-76, WITH FLEXIBLE PLASTIC BITUMEN GASKETS AT JOINTS, UNLESS OTHERWISE NOTED

6. EXISTING DRAINAGE STRUCTURES TO BE INSPECTED AND REPAIRED AS NEEDED, AND EXISTING PIPES TO BE CLEANED OUT TO REMOVE ALL SILT AND DEBRIS.

7. EXISTING GRADE CONTOUR INTERVALS SHOWN AT 0.5 FOOT.

8. PROPOSED GRADE CONTOUR INTERVALS SHOWN AT 0.5 FOOT INTERVALS.

9. IF ANY EXISTING STRUCTURES TO REMAIN ARE DAMAGED DURING CONSTRUCTION IT SHALL BE THE CONTRACTORS RESPONSIBILITY TO REPAIR AND/OR REPLACE THE EXISTING STRUCTURE AS NECESSARY TO RETURN IT TO EXISTING CONDITIONS OR BETTER.

10. ALL STORM PIPE ENTERING STRUCTURES SHALL BE GROUTED TO ASSURE CONNECTION AT STRUCTURE IS WATERTIGHT.

11. ALL STORM SEWER MANHOLES IN PAVED AREAS SHALL BE FLUSH WITH PAVEMENT, AND SHALL HAVE TRAFFIC BEARING RING & COVERS. MANHOLES IN UNPAVED AREAS SHALL BE 6" ABOVE FINISH GRADE. LIDS SHALL BE LABELED "STORM SEWER".

12. THE CONTRACTOR SHALL ADHERE TO ALL TERMS & CONDITIONS AS OUTLINED IN THE GENERAL N.P.D.E.S. PERMIT FOR STORMWATER DISCHARGE ASSOCIATED WITH CONSTRUCTION ACTIVITIES.

13. CONTRACTOR SHALL ADJUST AND/OR CUT EXISTING PAVEMENT AS NECESSARY TO ASSURE A SMOOTH FIT AND CONTINUOUS GRADE.

14. CONTRACTOR SHALL ASSURE POSITIVE DRAINAGE AWAY FROM BUILDINGS FOR ALL NATURAL AND PAVED AREAS.

15. TOPOGRAPHIC INFORMATION TAKEN FROM A TOPOGRAPHIC SURVEY BY GULFCOAST SURVEY ASSOCIATES, INC., IF CONTRACTOR DOES NOT ACCEPT EXISTING TOPOGRAPHY AS SHOWN ON THE PLANS, WITHOUT EXCEPTION, HE SHALL HAVE MADE, AT HIS EXPENSE, A TOPOGRAPHIC SURVEY BY A REGISTERED LAND SURVEYOR AND SUBMIT IT TO THE OWNER FOR REVIEW.

16. ALL UNSURFACED AREAS DISTURBED BY GRADING OPERATION SHALL RECEIVE 4 INCHES OF TOPSOIL. CONTRACTOR SHALL APPLY STAKED SOD TO ALL SLOPES 3H:1V OR STEEPER. CONTRACTOR SHALL GRASS DISTURBED AREAS IN ACCORDANCE WITH STATE SPECIFICATIONS UNTIL A HEALTHY STAND OF GRASS IS OBTAINED. IF ADEQUATE TOPSOIL IS NOT AVAILABLE ON SITE THE CONTRACTOR SHALL PROVIDE TOPSOIL, APPROVED BY THE OWNER, AS NEEDED.

17. CONSTRUCTION SHALL COMPLY WITH ALL APPLICABLE GOVERNING CODES AND BE CONSTRUCTED TO SAME.

18. ALL STORM STRUCTURES SHALL HAVE A SMOOTH UNIFORM POURED MORTAR INVERT FROM INVERT IN TO INVERT OUT.

19. CATCH BASINS, MANHOLES, FRAMES, GRATES, SHALL MEET THE REQUIREMENTS OF THE LATEST EDITION OF THE FLORIDA DEPARTMENT OF TRANSPORTATION STANDARD DETAILS FOR CONSTRUCTION AND THE SUMTER COUNTY REQUIREMENTS.

20. THE CONTRACTOR SHALL REFER TO THE ARCHITECTURAL PLANS FOR THE EXACT NUMBER, SIZE AND LOCATION OF ANY ROOF DRAINS.

21. INFORMATION CONCERNING UNDERGROUND UTILITIES WAS OBTAINED FROM AVAILABLE RECORDS AND FIELD LOCATIONS WHEN POSSIBLE, BUT THE CONTRACTOR MUST DETERMINE THE EXACT LOCATION AND ELEVATION OF ALL EXISTING UTILITIES BY DIGGING TEST PITS BY HAND AT ALL CROSSINGS WELL IN ADVANCE OF TRENCHING. IF CLEARANCES ARE LESS THAN SPECIFIED ON THE PLAN OR TWELVE INCHES (12"), WHICHEVER IS LESS, CONTACT THE DESIGN ENGINEER AND THE OWNER PRIOR TO PROCEEDING WITH CONSTRUCTION.

22. THE CONTRACTOR IS RESPONSIBLE FOR THE DESIGN AND IMPLEMENTATION OF ALL SHEETING, SHORING, BRACING, AND SPECIAL EXCAVATION MEASURES REQUIRED TO MEET OSHA, FEDERAL, STATE, AND LOCAL REGULATIONS PURSUANT TO THE INSTALLATION OF ALL WORK INDICATED ON THESE DRAWINGS. THE OWNER AND THE DESIGN ENGINEER ACCEPT NO RESPONSIBILITY FOR THE DESIGNS TO INSTALL SAID ITEMS.

23. PRECAST DRAINAGE STRUCTURES HAVE BEEN SPECIFIED ON THE PLANS. THE OWNER AND THE ENGINEER, HOWEVER, ASSUME NO RESPONSIBILITY FOR THESE STRUCTURES, AS FIELD CONDITIONS OFTEN DICTATE MINOR ELEVATION ADJUSTMENTS. THE CONTRACTOR ASSUMES ALL RESPONSIBILITY AND EXPENSE FOR MODIFYING THE PRECAST STRUCTURES TO ACCOMMODATE FIELD REVISIONS.

24. ALL SLOPES 3:1 AND STEEPER ARE TO RECEIVE STAKED SOD.

25. ALL GRADING OPERATIONS, EXCAVATIONS, FILL, COMPACTION TESTING AND BACKFILL SHALL BE OBSERVED AND TESTED BY A QUALIFIED GEOTECHNICAL ENGINEER. THE GEOTECHNICAL ENGINEER SHALL BE DESIGNATED BY AND PAID FOR BY THE OWNER.

26. NO FILL SHALL BE PLACED PRIOR TO APPROVAL OF THE SUBGRADE BY THE GEOTECHNICAL ENGINEER.

27. COMPACTION SHALL BE DONE IN ACCORDANCE WITH THE ON-SITE GEOTECHNICAL ENGINEERS RECOMMENDATIONS.

28. COMPACTION TESTS SHALL BE DONE FOR EACH TWO FEET OF FILL, BUT NOT LESS THAN ONE TEST FOR EVERY 500 CUBIC YARDS, OR MORE FREQUENTLY IF REQUIRED BY THE GEOTECHNICAL ENGINEER.

29. THE CONTRACTOR SHALL BE RESPONSIBLE FOR ANY ADDITIONAL COSTS INCURRED FOR INSPECTION AND TESTING OF SOILS DUE TO FAILURE TO COMPLY WITH THE MINIMUM REQUIREMENTS OF THE SOILS REPORT.

30. ALL GRADING OPERATIONS SHALL BE STAKED BY A REGISTERED CIVIL ENGINEER OR LICENSED LAND SURVEYOR APPROVED BY THE OWNER.

31. UPON COMPLETION OF THE GRADING, THE SOILS ENGINEER SHALL PROVIDE OWNER WITH A LETTER INDICATING THAT THE SITE AND BUILDING PAD WERE PREPARED IN DIRECT CONFORMANCE WITH THE RECOMMENDATIONS AND CONCLUSIONS IN THE SOILS REPORT.

32. CROSS-SLOPE THROUGH STRIPED AREA LEADING TO PUBLIC SIDEWALK SHALL NOT EXCEED 2.0%.

N

0 20 40 60
SCALE: 1" = 20'

REVISIONS

ISSUED	COMMENT

COMMERCIAL SITE SOLUTIONS, INC.
SITE PLANNING • ENGINEERING
402 EAST 1ST AVENUE
EASLEY, SC 29640
864-855-5200
5032 TAMPA WEST BLVD.
TAMPA, FL 33634
813-885-2052
813-882-4372 (FAX)

PREPARED FOR:
MURPHY OIL USA, INC.
422 NORTH WASHINGTON AVENUE
EL DORADO, AR 71730
PH: 870-875-7629

GRADING PLAN

MURPHY OIL USA
WILDWOOD, FL
EAST COUNTY ROAD 466
WILDWOOD, FL

Date:	5/25/10
Drawn:	MGL
Checked:	—

C-7
Sheet

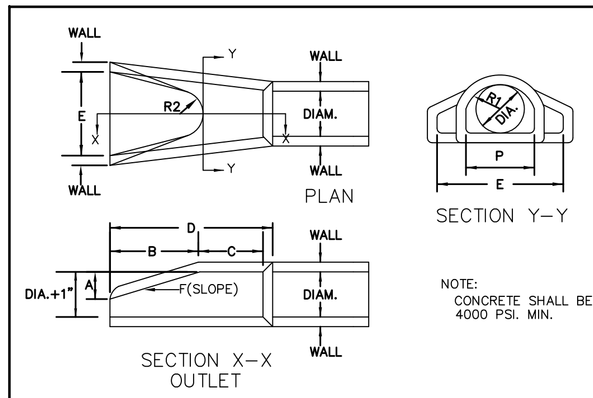

NOTE:
CONCRETE SHALL BE 4000 PSI. MIN.

FLARED – END – DIMENSIONS											
DIA.	WALL	A	B	C	D	E	F	P	R1	R2	T
12	2	4	24	49	73	24	2.2:1	20	10	9	2
15	2–1/4	6	27	46	73	32	2.2:1	24	12	11	21/4
18	2–1/2	9	27	46	73	36	2.2:1	29	16	12	21/2
24	3	10	44	30	74	48	2.4:1	33	17	14	3
30	3–1/2	12	54	20	74	60	2.4:1	37	18	15	31/2
36	4	15	63	35	98	72	2.4:1	48	24	20	4
42	4–1/2	22	63	35	98	78	3:1	54.86	27.43	22	33/4
48	5	25	72	26	98	84	3:1	57.55	28.78	22	41/4
54	5–1/2	28	66	34	100	90	2.4:1	66.24	33.12	24	41/2

FLARED END SECTION

N.T.S.

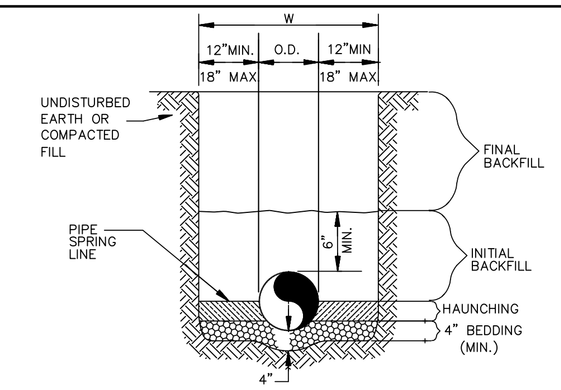

STORM DRAIN

N.T.S.

GENERAL NOTES

1. BEDDING SHALL BE WORKED BY HAND AND SHALL BE A BLEND OF ANGULAR MATERIAL THAT CONFORMS TO THE FOLLOWING SIEVE ANALYSIS: 100% PASSING 1–1/2 INCHES, 0–10% PASSING NO. 4 AND 0–5% PASSING NO. 200. IF GROUNDWATER IS ANTICIPATED, THEN BEDDING SHALL CONFORM TO THE FOLLOWING SIEVE ANALYSIS: 100% PASSING 1–1/2 INCHES, 0–50% PASSING NO.4, AND 0–5% PASSING NO. 200 COMPACTED TO 95% STANDARD PROCTOR.

2. HAUNCHING AND INTIAL BACKFILL SHALL BE WORKED AROUND THE PIPE BY HAND TO ELIMINATE VOIDS AND SHALL BE THE SAME AS THE BEDDING MATERIAL OR COARSE–GRAINED SOILS CONFORMING TO ASTM D2487 GROUP SYMBOL, GW, GP, SW, AND SP COMPACTED TO 95% PROCTOR.

3. FINAL BACKFILL SHALL BE ANGULAR MATERIAL THAT CORESPONDS TO THE FOLLOWING SIEVE ANALYSIS: 100% PASSING 1–1/2 INCHES, 0–10% PASSING NO. 4, AND 0–5% PASSING NO. 200, OR 100% PASSING 1–1/2 INCHES, 0–50% PASSING NO. 4, AND 0–5% PASSING NO. 200, OR COARSE GRAIN SOILS WITH OR WITHOUT FINES THAT CONFORM TO ASTM D2487 SYMBOL GW, GP, SW, SP, GM, GC, SM, AND SC. MATERIAL TO BE COMPACTED AS NOTED IN NOTE 2.

4. ALL MATERIALS ARE CLASSIFIED IN ACCORDANCE WITH ASTM D 2321–89.

5. ALL MATERIALS SHALL BE INSTALLED IN MAXIMUM 8" LOOSE LIFTS IN ACCORDANCE WITH ASTM D 698. MATERIALS THAT CORRESPOND TO SYMBOL GM, GC, SM, AND SC SHALL BE COMPACTED NEAR OPTIMUM MOISTURE CONTENT.

6. FILL SALVAGED FROM EXCAVATION SHALL BE FREE OF DEBRIS, ORGANICS AND ROCKS LARGER THAN 3".

7. ALL TRENCH EXCAVATIONS SHALL BE SLOPED, SHORED, SHEETED, BRACED, OR OTHERWISE SUPPORTED IN COMPLIANCE WITH OSHA REGULATIONS AND LOCAL ORDINANCES. (SEE SPECIFICATIONS)

BEDDING DETAIL

N.T.S.

NOTE: ALL MATERIALS ARE CLASSIFIED IN ACCORDANCE WITH ASTM D 2321–89.

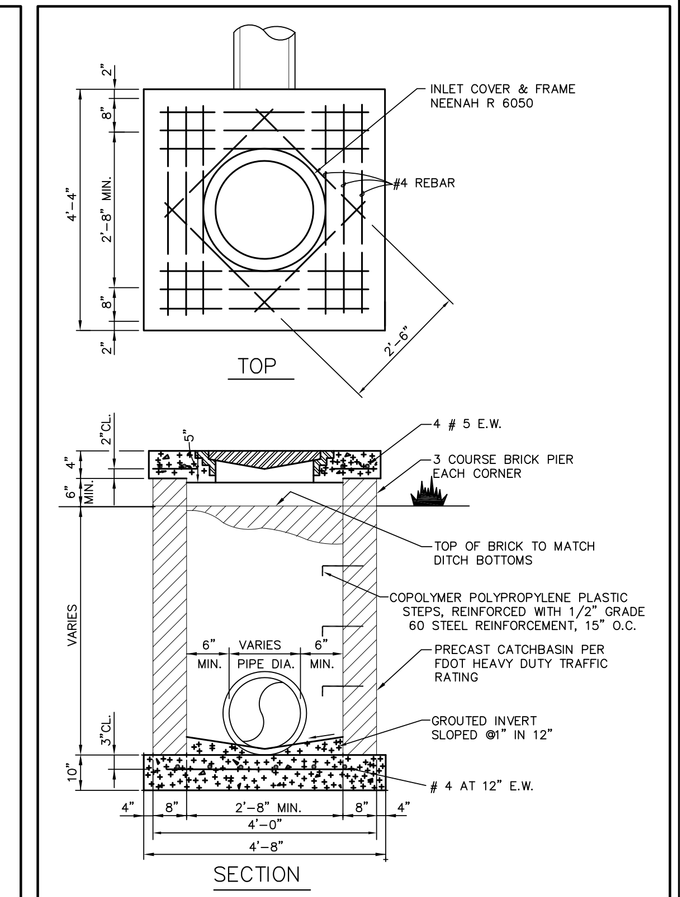

YARD INLET

(N.T.S.)

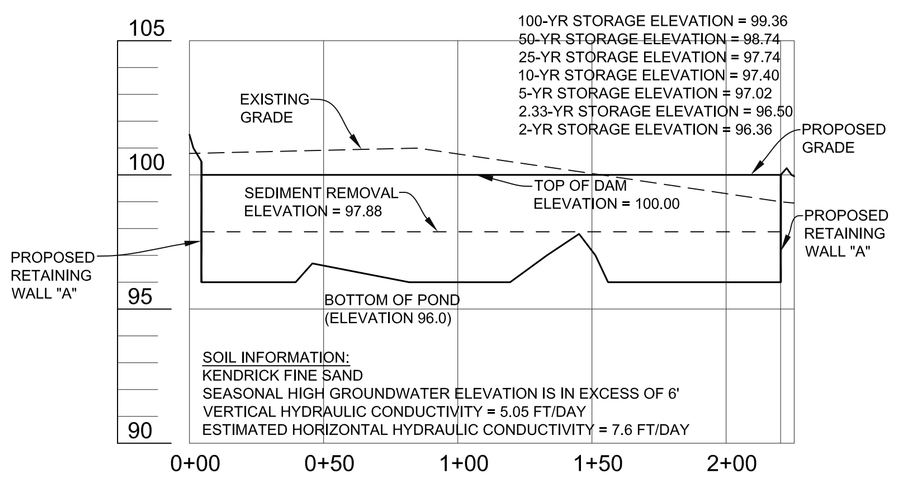

SECTION "A-A" THROUGH STORMWATER POND

HORIZONTAL SCALE: 1" = 40'
VERTICAL SCALE: 1" = 4'

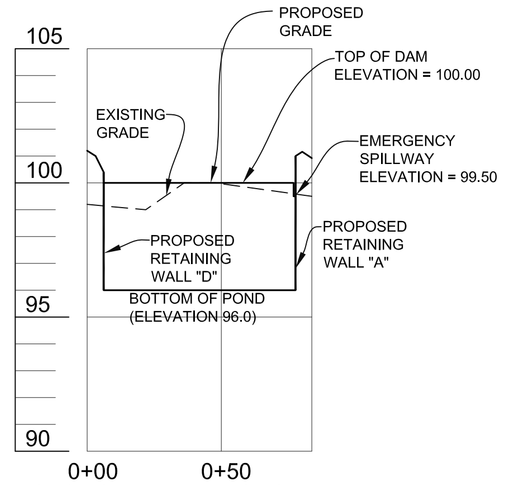

SECTION "B-B" THROUGH STORMWATER POND

HORIZONTAL SCALE: 1" = 40'
VERTICAL SCALE: 1" = 4'

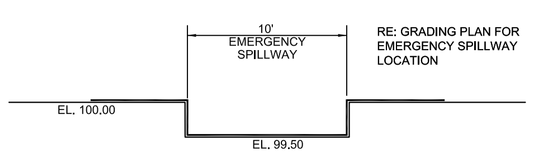

STORMWATER POND EMERGENCY SPILLWAY END VIEW

N.T.S.

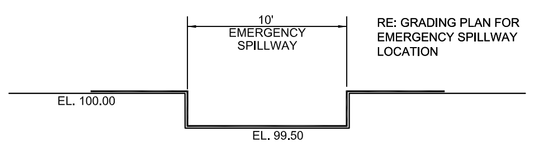

SEDIMENT TRAP EMERGENCY SPILLWAY END VIEW

N.T.S.

SEDIMENT TRAP DESIGN

TRAP CAPACITY:

PROPOSED DRAINAGE AREA TO TRAP = 1,488 ACRES

REQUIRED TRAP CAPACITY = 3,600 CU. FT. / ACRE
= 3,600 CU. FT. / ACRE x 1,488 ACRES = 5,357 CU. FT.

TRAP CAPACITY PROVIDED = 28,118 CU. FT.

CLEANOUT CAPACITY = 14,059 CU. FT.

CLEANOUT ELEVATION = 97.88'

EXCAVATION:

BOTTOM OF TRAP ELEVATION= 95.0'

SEDIMENT TRAP DAM ELEVATION = 99.0'

EMERGENCY SPILLWAY WIDTH = 10'

EMERGENCY SPILLWAY ELEVATION = 99.50'

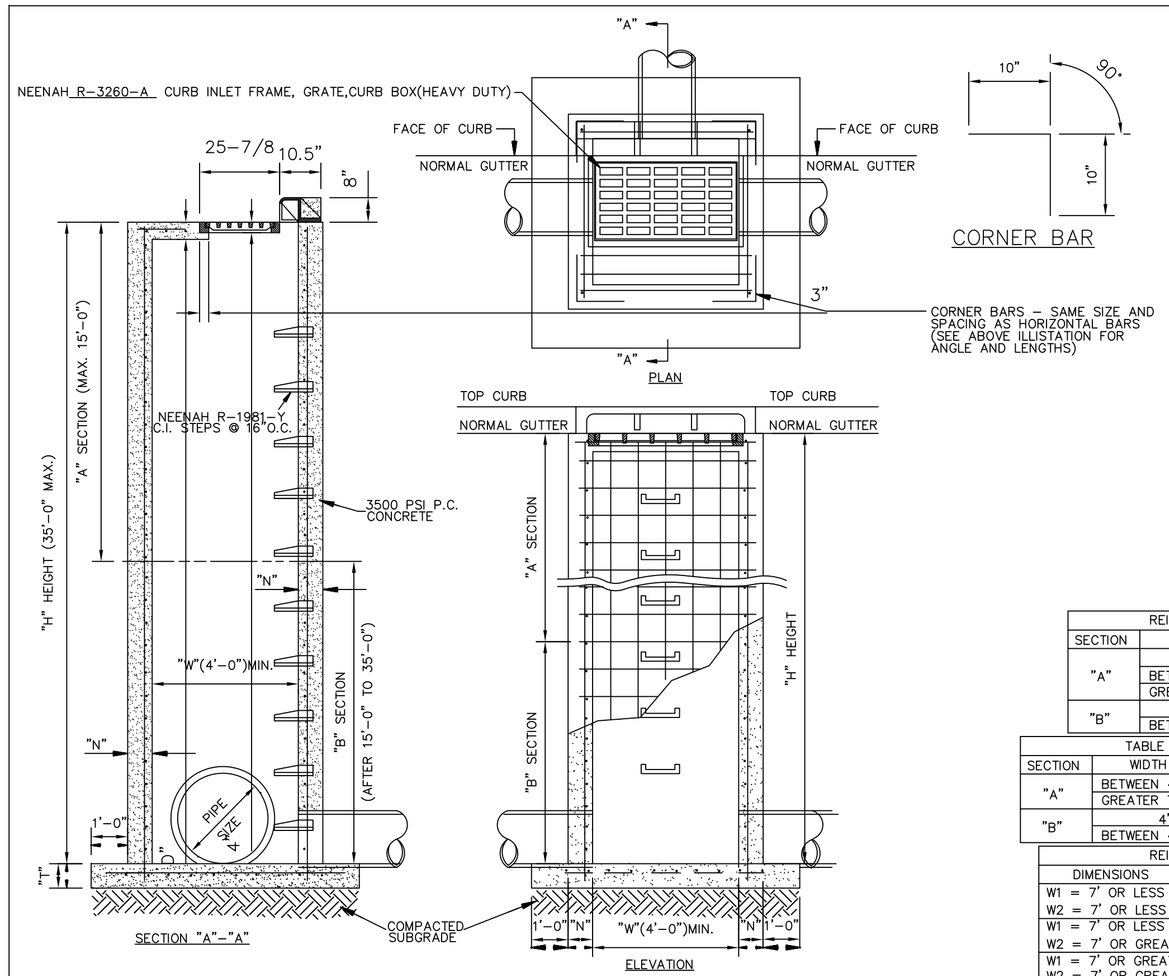

GENERAL NOTES:

1. ALL EXPOSED CORNERS TO HAVE 3/4" CHAMFER
2. ALL #4 & #5 REINFORCING BARS TO HAVE 1–1/2" COVER, LARGER SIZES TO HAVE 2" COVER.
3. SEE GRADING AND DRAINAGE PLAN FOR PIPE SIZES, LOCATIONS, AND FLOW LINES.
4. PIPES SHALL CONNECT TO THE ENDS OR SIDES OF THE INLET. CONNECTION SHALL NOT BE MADE AT CORNERS OF INLET.
5. ALL REINFORCING BARS TO BE GRADE 60.

REINFORCEMENT SCHEDULE, BASE	
SECTION	
"A"	#4's @ 6" E.W.
"B"	#6's @ 6" E.W.

TABLE OF "W" DIMENSIONS			
PIPE SIZE	SKEW OF CROSS DRAIN		
SINGLE	STRAIGHT	30°	45°
–24"	4'–0"	4'–0"	4'–10"
30"	4'–0"	4'–7"	5'–8"
36"	4'–0"	5'–3"	6'–5"
42"	5'–3"	5'–11"	7'–3"
48"	5'–10"	6'–7"	8'–0"
60"	7'–0"	7'–10"	9'–8"
DOUBLE	FOR "A" SECTION ONLY		
24"	7'–0"	7'–10"	9'–5"
30"	8'–2"	9'–2"	11'–0"
36"	9'–4"	10'–6"	12'–6"
42"	10'–6"	11'–10"	14'–2"
48"	11'–8"	13'–2"	15'–10"

REINFORCEMENT SCHEDULE, WALLS			
SECTION	WIDTH ("W")	HOR.	VERT.
"A"	4'	#4's @ 9"	#4's @ 10"
	BETWEEN 4' & 7'	#6's @ 9"	#4's @ 10"
	GREATER THAN 7'	#5's @ 4 1/2"	#4's @ 10"
"B"	4'	#4's @ 6"	#4's @ 10"
	BETWEEN 4' & 7'	#6's @ 6"	#4's @ 10"

TABLE OF "T" & "N" DIMENSIONS				
SECTION	WIDTH ("W")	"T"	"N"	"D"
"A"	BETWEEN 4' & 7'	6" + PIPE THICKNESS	8"	6"
	GREATER THAN 7'	6" + PIPE THICKNESS	8"	8"
"B"	4'	6" + PIPE THICKNESS	8"	8"
	BETWEEN 4' & 7'	6" + PIPE THICKNESS	10"	8"

REINFORCEMENT SCHEDULE, TOP		
DIMENSIONS	STEEL	SPECIAL PATTERN
W1 = 7' OR LESS	#4's @ 8" E.W.	DIAGONAL @ COVER
W2 = 7' OR LESS	#4's @ 8" E.W.	DIAGONAL @ COVER
W1 = 7' OR LESS	#4's @ 8" E.W.	DIAGONAL @ COVER
W2 = 7' OR GREATER	#4'S @ 6" E.W.	DIAGONAL @ COVER
W1 = 7' OR GREATER	#4's @ 6" E.W.	DIAGONAL @ COVER
W2 = 7' OR GREATER	#4's @ 6" E.W.	DIAGONAL @ COVER

COMBINATION INLET

N.T.S.

CAUTION

FL ONE CALL: UTILITY LOCATOR SERVICE
3 DAYS BEFORE DIGGING CALL TOLL FREE 1–800–432–4770 OR 811
A ONE CALL SYSTEM FOR COMMUNITY AND JOB SAFETY.

*** CAUTION ***
THE UNDERGROUND UTILITIES SHOWN HAVE BEEN LOCATED FROM FIELD SURVEY INFORMATION AND EXISTING DRAWINGS. THE SURVEYOR MAKES NO GUARANTEE THAT THE UNDERGROUND UTILITIES SHOWN COMPRISE ALL SUCH UTILITIES IN THE AREA, EITHER IN SERVICE OR ABANDONED. THE SURVEYOR FURTHER DOES NOT WARRANT THAT THE UNDERGROUND UTILITIES SHOWN ARE IN THE EXACT LOCATION INDICATED, ALTHOUGH HE DOES CERTIFY THAT THEY ARE LOCATED AS ACCURATELY AS THE SOURCE INFORMATION AVAILABLE. THE SURVEYOR HAS NOT PHYSICALLY LOCATED THE UNDERGROUND UTILITIES.

REVISIONS

ISSUED	COMMENT

COMMERCIAL SITE SOLUTIONS, INC.
SITE PLANNING • ENGINEERING
402 EAST 1ST AVENUE
EASLEY, SC 29640
864-855-5200
5032 TAMPA WEST BLVD.
TAMPA, FL 33634
813-885-2052
813-882-4372 (FAX)

PREPARED FOR:
MURPHY OIL USA, INC.
422 NORTH WASHINGTON AVENUE
EL DORADO, AR 71730
PH: 870-875-7629

POND SECTION AND STORMDRAIN DETAILS

MURPHY OIL USA
WILDWOOD, FL
EAST COUNTY ROAD 466
WILDWOOD, FL

Date: 5/25/10
Drawn: RSM
Checked: MGL

C-8
Sheet

MAINTENANCE:

ALL MEASURES STATED ON THIS EROSION AND SEDIMENTATION CONTROL PLAN, AND IN THE EROSION CONTROL SPECIFICATIONS, SHALL BE MAINTAINED IN FULLY FUNCTIONAL CONDITION UNTIL NO LONGER REQUIRED FOR A COMPLETED PHASE OF WORK OR FINAL STABILIZATION OF THE SITE. ALL EROSION AND SEDIMENTATION CONTROL MEASURES SHALL BE CHECKED BY A QUALIFIED PERSON AT LEAST ONCE EVERY SEVEN CALENDAR DAYS AND WITHIN 24 HOURS OF THE END OF A 0.5" RAINFALL EVENT, AND CLEANED AND REPAIRED IN ACCORDANCE WITH THE FOLLOWING:

1. INLET PROTECTION DEVICES AND BARRIERS SHALL BE REPAIRED OR REPLACED IF THEY SHOW SIGNS OF UNDERMINING, OR DETERIORATION.
2. ALL SEEDED AREAS SHALL BE CHECKED REGULARLY TO SEE THAT A GOOD STAND IS MAINTAINED. AREAS SHOULD BE FERTILIZED, WATERED, AND RESEEDED AS NEEDED.
3. SILT FENCES SHALL BE REPAIRED TO THEIR ORIGINAL CONDITIONS IF DAMAGED. SEDIMENT SHALL BE REMOVED FROM THE SILT FENCES WHEN IT REACHES ONE-HALF THE HEIGHT OF THE SILT FENCE.

MAINTENANCE CONTINUED:

4. THE CONSTRUCTION ENTRANCE SHALL BE MAINTAINED IN A CONDITION WHICH WILL PREVENT TRACKING OR FLOW OF MUD ONTO PUBLIC RIGHTS-OF-WAY OR PRIVATE DRIVES. THIS MAY REQUIRE PERIODIC TOP DRESSING OF THE CONSTRUCTION ENTRANCES AS CONDITIONS DEMAND.
5. THE TEMPORARY PARKING AND STORAGE AREA SHALL BE KEPT IN GOOD CONDITION (SUITABLE FOR PARKING AND STORAGE). THIS MAY REQUIRE PERIODIC TOP DRESSING OF THE TEMPORARY PARKING AS CONDITIONS DEMAND.
7. ALL SLOPES 3:1 AND STEEPER SHALL RECEIVE STAKED SOD PER SPECS.
8. SILT DIKE PROTECTION DEVICES AND BARRIERS SHALL BE REPAIRED OR REPLACED IF THEY SHOW SIGNS OF UNDERMINING, OR SHALL BE REPLACED IF THEY SHOW SIGNS OF DETERIORATION.
9. IF THE STONES IN THE GRAVEL INLET SEDIMENT FILTERS BECOME CLOGGED WITH SEDIMENT, THE STONES MUST BE PULLED AWAY, CLEANED AND REPLACED.

LEGEND

EXISTING	PROPOSED	DESCRIPTION
148	148	CONTOUR LINE
	IP	INLET PROTECTION
		STORM DRAIN INLET
MH		STORM DRAIN MANHOLE
15"RCP		STORM DRAIN PIPE
	SF	SILT FENCE
		LIMITS OF DISTURBANCE
		PROVIDE BARRICADE AT ALL ENTRANCE LOCATIONS W/O TEMP STONE CONSTRUCTION EXIT
		TEMPORARY STONE CONSTRUCTION EXIT

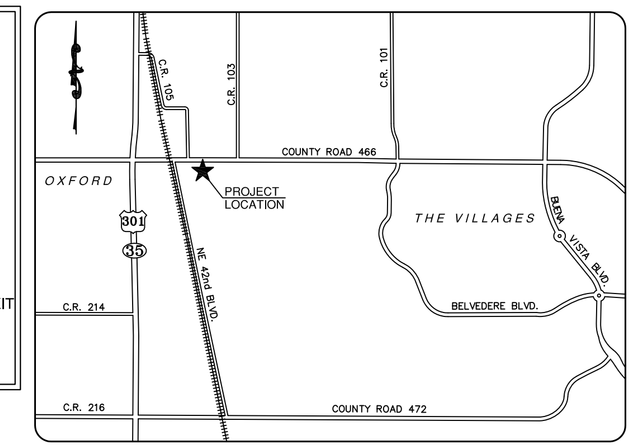

VICINITY MAP
(NOT TO SCALE)

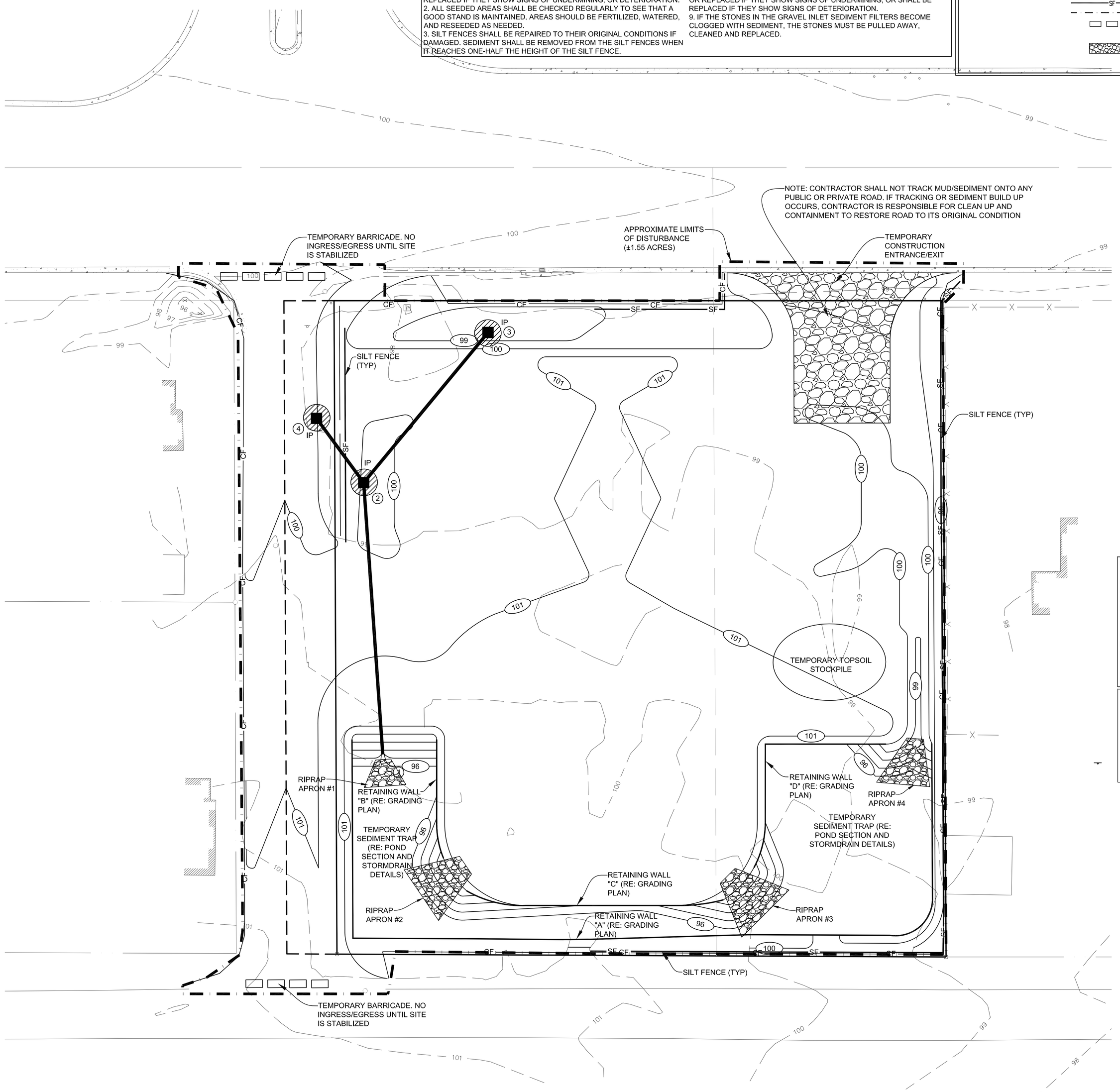

NOTE: SEE EROSION CONTROL DETAILS (SHEET 12) FOR RIRPRAP APRON DESIGN

NOTE: DISPOSAL OF SEDIMENT,
SEDIMENT REMOVED FROM SILT FENCE, INLET PROTECTION, SEDIMENT PONDS AND TRAPS, ETC. DURING THE COURSE OF CONSTRUCTION, SHALL BE PLACED ON THE TOPSOIL STOCKPILE AND RESPREAD AT THE END OF THE PROJECT. SEDIMENT REMOVED FROM THESE ITEMS AFTER THE SITE HAS BEEN SEEDED, SHALL BE HAULED OF SITE AND DISPOSED OF AT AN APPROVED, LISCENCED SPOIL AREA THAT IS IN FULL COMPLIANCE WITH THE NPDES REGULATIONS. CONTRACTOR IS RESPONSIBLE FOR OBTAINING ANY APPROVALS NECESSARY TO ALLOW FOR THE DISPOSAL OF THIS MATERIAL IF HAULED OFF-SITE.

NOTE: THE CONTRACTOR SHALL PROVIDE THE CONSULTING ENGINEER WITH A MINIMUM OF 72 HOURS ADVANCE NOTICE TO THE START OF CONSTRUCTION ACTIVITY. ACTIVITY IS DEFINED, BUT NOT NECESSARILY LIMITED TO INSTALLATION OF STONE CONSTRUCTION DRIVE, SILT FENCE, CLEARING AND GRUBBING, STRIPPING TOPSOIL, GRADING, AND INSTALLATION OF ANY UTILITY OR ROAD WORK. SITE INSPECTIONS BY THE CEC AS REQUIRED CAN THEN BE ARRANGED.

THE CONTRACTOR SHALL MAINTAIN CLOSE CONTACT WITH SUMTER COUNTY AND FDEP INSPECTORS SO THAT PERIODIC INSPECTIONS CAN BE PERFORMED AT APPROPRIATE STAGES OF CONSTRUCTION. INSPECTION SCHEDULE MUST BE CARRIED OUT IN ACCORDANCE WITH JURISDICTIONAL REQUIREMENTS.

THE LOCATION OF THE SILT FENCE AND CONSTRUCTION/TREE PROTECTION FENCING ON THE DRAWINGS IS FOR GRAPHCIAL PURPOSES ONLY. THE CONTRACTOR IS TO INSURE THAT THE SILT FENCE AND CONSTRUCTION/TREE PROTECTION FENCING ENCOMPASSES THE ENTIRE WORK AREA.

GENERAL EROSION NOTES:

1. ALL CONTRACTORS AND SUBCONTRACTORS INVOLVED WITH EROSION CONTROL SHALL OBTAIN A COPY OF THE EROSION CONTROL PLAN AND THE STATE NATIONAL POLLUTANT DISCHARGE ELIMINATION SYSTEM GENERAL PERMIT (NPDES PERMIT) AND BECOME FAMILIAR WITH THEIR CONTENTS.

2. CONTRACTOR SHALL IMPLEMENT BEST MANAGEMENT PRACTICES AS REQUIRED BY THE EROSION CONTROL PLAN. ADDITIONAL BEST MANAGEMENT PRACTICES SHALL BE IMPLEMENTED AS DICTATED BY CONDITIONS AT NO ADDITIONAL COST OF OWNER THROUGHOUT ALL PHASES OF CONSTRUCTION.

3. BEST MANAGEMENT PRACTICES (BMP'S) AND CONTROLS SHALL CONFORM TO FEDERAL, STATE, OR LOCAL REQUIREMENTS OR MANUAL OF PRACTICE, AS APPLICABLE. CONTRACTOR SHALL IMPLEMENT ADDITIONAL CONTROLS AS DIRECTED BY PERMITTING AGENCY OR OWNER.

4. CONTRACTOR SHALL MINIMIZE CLEARING TO THE MAXIMUM EXTENT PRACTICAL OR AS REQUIRED BY THE GENERAL PERMIT.

5. GENERAL CONTRACTOR SHALL DENOTE ON PLAN ANY TEMPORARY PARKING AND STORAGE AREA WHICH SHALL ALSO BE USED AS THE EQUIPMENT MAINTENANCE AND CLEANING AREA, EMPLOYEE PARKING AREA, AND AREA FOR LOCATING PORTABLE FACILITIES, OFFICE TRAILERS, AND TOILET FACILITIES.

6. ALL WASH WATER (CONCRETE TRUCKS, VEHICLE CLEANING, EQUIPMENT CLEANING, ETC.) SHALL BE DISPOSED OF IN A MANNER THAT PREVENTS CONTACT BETWEEN THESE MATERIALS AND STORM WATER THAT IS DISCHARGED FROM THE SITE.

7. SUFFICIENT OIL AND GREASE ABSORBING MATERIALS AND FLOTATION BOOMS SHALL BE MAINTAINED ON SITE OR READLY AVAILABLE TO CONTAIN AND CLEAN-UP FUEL OR CHEMICAL SPILLS AND LEAKS.

8. DUST ON THE SITE SHALL BE CONTROLLED BY SPRAYING WATER ON DRY AREAS OF THE SITE. THE USE OF MOTOR OILS AND OTHER PETROLEUM BASED OR TOXIC LIQUIDS FOR DUST SUPPRESSION OPERATIONS IS PROHIBITED.

9. RUBBISH, TRASH, GARBAGE, LITTER, OR OTHER SUCH MATERIALS SHALL BE DEPOSITED INTO SEALED CONTAINERS. MATERIALS SHALL BE PREVENTED FROM LEAVING THE PREMISES THROUGH THE ACTION OF WIND OR STORMWATER DISCHARGE INTO DRAINAGE DITCHES OR WATERS OF THE STATE.

10. ALL EROSION CONTROL MEASURES PRESENTED ON THIS PLAN SHALL BE INITIATED AS SOON AS PRACTICABLE.

11. DISTURBED PORTIONS OF THE SITE WHERE CONSTRUCTION ACTIVITY HAS STOPPED FOR AT LEAST 14 DAYS, SHALL BE TEMPORARILY SEEDED. AREAS SHALL BE SEEDED NO LATER THAN 14 DAYS FROM THE LAST CONSTRUCTION ACTIVITY OCCURRING IN THESE AREAS OR AS REQUIRED BY THE PERMIT.

12. DISTURBED PORTIONS OF THE SITE WHERE CONSTRUCTION ACTIVITY HAS PERMANENTLY STOPPED SHALL BE PERMANENTLY SEEDED. THESE AREAS SHALL BE SEEDED NO LATER THAN 14 DAYS AFTER THE LAST CONSTRUCTION ACTIVITY OCCURRING IN THESE AREAS. REFER TO THE GRADING PLAN AND/OR LANDSCAPE PLAN.

13. IF THE ACTION OF VEHICLES TRAVELING OVER THE GRAVEL CONSTRUCTION ENTRANCES IS NOT SUFFICIENT TO REMOVE THE MAJORITY OF DIRT OR MUD, THEN THE TIRES MUST BE WASHED BEFORE THE VEHICLES ENTER A PUBLIC ROAD. IF WASHING IS USED, PROVISIONS MUST BE MADE TO INTERCEPT THE WASH WATER AND TRAP THE SEDIMENT BEFORE IT IS CARRIED OFF THE SITE.

14. ALL MATERIALS SPILLED, DROPPED, WASHED, OR TRACKED FROM VEHICLES ONTO ROADWAYS OR INTO STORM DRAINS MUST BE REMOVED IMMEDIATELY.

15. CONTRACTORS OR SUBCONTRACTORS WILL BE RESPONSIBLE FOR REMOVING SEDIMENT IN ANY POND/TRAP AND ANY SEDIMENT THAT MAY HAVE COLLECTED IN THE STORM SEWER DRAINAGE SYSTEMS IN CONJUNCTION WITH THE STABILIZATION OFTHE SITE.

16. ON-SITE & OFF-SITE SOIL STOCKPILE AND BORROW AREAS SHALL BE PROTECTED FROM EROSION AND SEDIMENTATION THROUGH IMPLEMENTATION OF BEST MANAGEMENT PRACTICES. STOCKPILE AND BORROW AREA LOCATIONS SHALL BE FIELD-LOCATED AND NOTED ON THE SITE MAP AND PERMITTED IN ACCORDANCE WITH GENERAL PERMIT REQUIREMENTS.

17. SLOPES SHALL BE LEFT IN A ROUGHENED CONDITION DURING THE GRADING PHASE TO REDUCE RUNOFF VELOCITIES AND EROSION.

18. DUE TO THE GRADE CHANGES DURING THE DEVELOPMENT OF THE PROJECT, THE CONTRACTOR SHALL BE RESPONSIBLE FOR ADJUSTING THE EROSION CONTROL MEASURES (SILT FENCES ETC.) TO PREVENT EROSION.

19. ALL CONSTRUCTION SHALL BE STABILIZED AT THE END OF EACH WORKING DAY, THIS INCLUDES BACKFILLING OF TRENCHES FOR UTILITY CONSTRUCTION AND PLACEMENT OF GRAVEL OR BITUMINOUS PAVING FOR ROAD CONSTRUCTION.

20. IF SOIL STOCKPILING IS EMPLOYED ON THE SITE, SILT FENCES SHALL BE USED TO HELP CONTAIN THE SEDIMENT.

21. SEDIMENT BASINS ARE ATTRACTIVE TO CHILDREN AND CAN BE VERY DANGEROUS. IN ALL CASES, LOCAL ORDINANCES AND REGULATIONS REGARDING HEALTH AND SAFETY MUST BE ADHERED TO.

22. ALL TEMPORARY EROSION AND SEDIMENT CONTROL MEASURES SHALL BE DISPOSED OF WITHIN 30 DAYS AFTER FINAL STABILIZATION. FINAL STABILIZATION HAS OCCURRED WHEN ALL SOIL DISTURBING ACTIVITIES ARE COMPLETED AND A UNIFORM PERENNIAL VEGETATIVE COVER WITH A DENSITY OF 70% OF THE COVER FOR UNPAVED AREAS AND AREAS NOT COVERED BY PERMANENT STRUCTURES HAS BEEN EMPLOYED.

SEQUENCE OF CONSTRUCTION - PHASE 1:

1. INSTALL STABILIZED CONSTRUCTION ENTRANCE.
2. INSTALL SILT FENCES ON THE SITE.
3. DEMOLISH EXISTING ITEMS AS NECESSARY TO INSTALL SEDIMENT TRAP.
4. CONSTRUCT RETAINING WALLS AND INSTALL SEDIMENT TRAP AS SHOWN ON THIS PLAN AND THE DETAIL SHEETS.
5. DEMOLISH THE REMAINING STRUCTURES AND CLEAR AND GRUB REMAINING VEGETATION.
6. BEGIN ROUGH GRADING THE SITE AND CONSTRUCT THE STORMDRAIN SYSTEM.
7. INSTALL INLET PROTECTION ON ALL INLETS.
8. REFER TO PHASE 2 EROSION CONTROL PLAN AND SEQUENCE OF CONSTRUCTION.

N

0 20 40 60
SCALE: 1" = 20'

REVISIONS

ISSUED	COMMENT

COMMERCIAL SITE SOLUTIONS, INC.
SITE PLANNING • ENGINEERING
402 EAST 1ST AVENUE
EASLEY, SC 29640
864-855-5200
5032 TAMPA WEST BLVD.
TAMPA, FL 33634
813-885-2052
813-882-4372 (FAX)

PREPARED FOR:
MURPHY OIL USA, INC.
422 NORTH WASHINGTON AVENUE
EL DORADO, AR 71730
PH: 870-875-7629

EROSION CONTROL PLAN - PHASE 1

MURPHY OIL USA
WILDWOOD, FL
EAST COUNTY ROAD 466
WILDWOOD, FL

Date:	5/25/10
Drawn:	MGL
Checked:	---

C-9
Sheet

MAINTENANCE:

ALL MEASURES STATED ON THIS EROSION AND SEDIMENTATION CONTROL PLAN, AND IN THE EROSION CONTROL SPECIFICATIONS, SHALL BE MAINTAINED IN FULLY FUNCTIONAL CONDITION UNTIL NO LONGER REQUIRED FOR A COMPLETED PHASE OF WORK OR FINAL STABILIZATION OF THE SITE. ALL EROSION AND SEDIMENTATION CONTROL MEASURES SHALL BE CHECKED BY A QUALIFIED PERSON AT LEAST ONCE EVERY SEVEN CALENDAR DAYS AND WITHIN 24 HOURS OF THE END OF A 0.5" RAINFALL EVENT, AND CLEANED AND REPAIRED IN ACCORDANCE WITH THE FOLLOWING:

1. INLET PROTECTION DEVICES AND BARRIERS SHALL BE REPAIRED OR REPLACED IF THEY SHOW SIGNS OF UNDERMINING, OR DETERIORATION.
2. ALL SEEDED AREAS SHALL BE CHECKED REGULARLY TO SEE THAT A GOOD STAND IS MAINTAINED. AREAS SHOULD BE FERTILIZED, WATERED, AND RESEEDED AS NEEDED.
3. SILT FENCES SHALL BE REPAIRED TO THEIR ORIGINAL CONDITIONS IF DAMAGED. SEDIMENT SHALL BE REMOVED FROM THE SILT FENCES WHEN IT REACHES ONE-HALF THE HEIGHT OF THE SILT FENCE.

MAINTENANCE CONTINUED:

4. THE CONSTRUCTION ENTRANCE SHALL BE MAINTAINED IN A CONDITION WHICH WILL PREVENT TRACKING OR FLOW OF MUD ONTO PUBLIC RIGHTS-OF-WAY OR PRIVATE DRIVES. THIS MAY REQUIRE PERIODIC TOP DRESSING OF THE CONSTRUCTION ENTRANCES AS CONDITIONS DEMAND.
5. THE TEMPORARY PARKING AND STORAGE AREA SHALL BE KEPT IN GOOD CONDITION (SUITABLE FOR PARKING AND STORAGE). THIS MAY REQUIRE PERIODIC TOP DRESSING OF THE TEMPORARY PARKING AS CONDITIONS DEMAND.
7. ALL SLOPES 3:1 AND STEEPER SHALL RECEIVE STAKED SOD PER SPECS.
8. SILT DIKE PROTECTION DEVICES AND BARRIERS SHALL BE REPAIRED OR REPLACED IF THEY SHOW SIGNS OF UNDERMINING, OR SHALL BE REPLACED IF THEY SHOW SIGNS OF DETERIORATION.
9. IF THE STONES IN THE GRAVEL INLET SEDIMENT FILTERS BECOME CLOGGED WITH SEDIMENT, THE STONES MUST BE PULLED AWAY, CLEANED AND REPLACED.

LEGEND

EXISTING	PROPOSED	DESCRIPTION
148	148	CONTOUR LINE
	IP	INLET PROTECTION
		STORM DRAIN INLET
MH		STORM DRAIN MANHOLE
15"RCP		STORM DRAIN PIPE
	SF	SILT FENCE LIMITS OF DISTURBANCE
		PROVIDE BARRICADE AT ALL ENTRANCE LOCATIONS W/O TEMP STONE CONSTRUCTION EXIT
		TEMPORARY STONE CONSTRUCTION EXIT

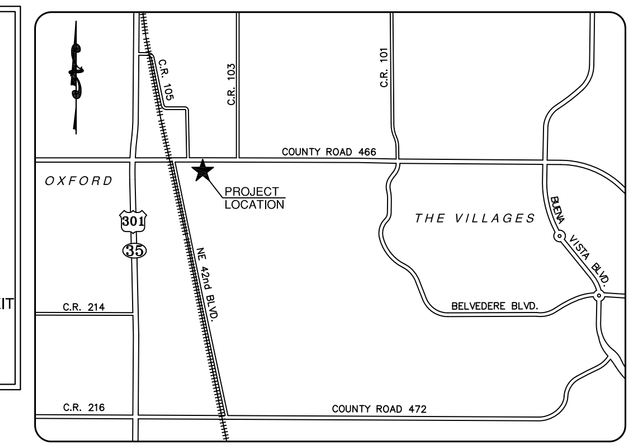

VICINITY MAP
(NOT TO SCALE)

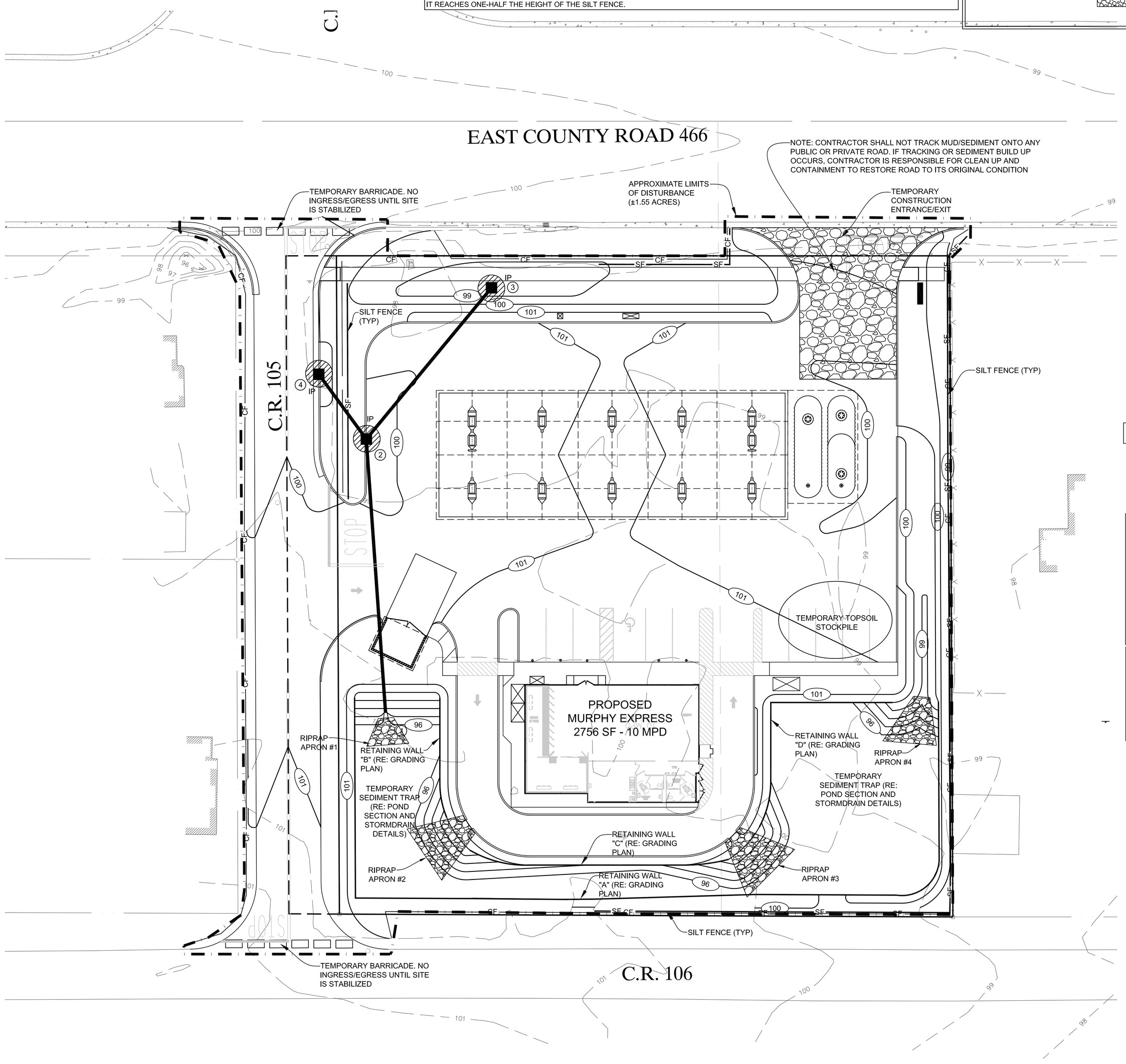

NOTE: SEE EROSION CONTROL DETAILS (SHEET 12) FOR RIRPRAP APRON DESIGN

NOTE: DISPOSAL OF SEDIMENT,
SEDIMENT REMOVED FROM SILT FENCE, INLET PROTECTION, SEDIMENT PONDS AND TRAPS, ETC. DURING THE COURSE OF CONSTRUCTION, SHALL BE PLACED ON THE TOPSOIL STOCKPILE AND RESPREAD AT THE END OF THE PROJECT. SEDIMENT REMOVED FROM THESE ITEMS AFTER THE SITE HAS BEEN SEEDED, SHALL BE HAULED OF SITE AND DISPOSED OF AT AN APPROVED, LISCENCED SPOIL AREA THAT IS IN FULL COMPLIANCE WITH THE NPDES REGULATIONS. CONTRACTOR IS RESPONSIBLE FOR OBTAINING ANY APPROVALS NECESSARY TO ALLOW FOR THE DISPOSAL OF THIS MATERIAL IF HAULED OFF-SITE.

NOTE: THE CONTRACTOR SHALL PROVIDE THE CONSULTING ENGINEER WITH A MINIMUM OF 72 HOURS ADVANCE NOTICE TO THE START OF CONSTRUCTION ACTIVITY. ACTIVITY IS DEFINED, BUT NOT NECESSARILY LIMITED TO INSTALLATION OF STONE CONSTRUCTION DRIVE, SILT FENCE, CLEARING AND GRUBBING, STRIPPING TOPSOIL, GRADING, AND INSTALLATION OF ANY UTILITY OR ROAD WORK. SITE INSPECTIONS BY THE CEC AS REQUIRED CAN THEN BE ARRANGED.

THE CONTRACTOR SHALL MAINTAIN CLOSE CONTACT WITH SUMTER COUNTY AND FDEP INSPECTORS SO THAT PERIODIC INSPECTIONS CAN BE PERFORMED AT APPROPRIATE STAGES OF CONSTRUCTION. INSPECTION SCHEDULE MUST BE CARRIED OUT IN ACCORDANCE WITH JURISDICTIONAL REQUIREMENTS.

THE LOCATION OF THE SILT FENCE AND CONSTRUCTION/TREE PROTECTION FENCING ON THE DRAWINGS IS FOR GRAPHCIAL PURPOSES ONLY. THE CONTRACTOR IS TO INSURE THAT THE SILT FENCE AND CONSTRUCTION/TREE PROTECTION FENCING ENCOMPASSES THE ENTIRE WORK AREA.

GENERAL EROSION NOTES:

1. ALL CONTRACTORS AND SUBCONTRACTORS INVOLVED WITH EROSION CONTROL SHALL OBTAIN A COPY OF THE EROSION CONTROL PLAN AND THE STATE NATIONAL POLLUTANT DISCHARGE ELIMINATION SYSTEM GENERAL PERMIT (NPDES PERMIT) AND BECOME FAMILIAR WITH THEIR CONTENTS.

2. CONTRACTOR SHALL IMPLEMENT BEST MANAGEMENT PRACTICES AS REQUIRED BY THE EROSION CONTROL PLAN. ADDITIONAL BEST MANAGEMENT PRACTICES SHALL BE IMPLEMENTED AS DICTATED BY CONDITIONS AT NO ADDITIONAL COST OF OWNER THROUGHOUT ALL PHASES OF CONSTRUCTION.

3. BEST MANAGEMENT PRACTICES (BMP'S) AND CONTROLS SHALL CONFORM TO FEDERAL, STATE, OR LOCAL REQUIREMENTS OR MANUAL OF PRACTICE, AS APPLICABLE. CONTRACTOR SHALL IMPLEMENT ADDITIONAL CONTROLS AS DIRECTED BY PERMITTING AGENCY OR OWNER.

4. CONTRACTOR SHALL MINIMIZE CLEARING TO THE MAXIMUM EXTENT PRACTICAL OR AS REQUIRED BY THE GENERAL PERMIT.

5. GENERAL CONTRACTOR SHALL DENOTE ON PLAN ANY TEMPORARY PARKING AND STORAGE AREA WHICH SHALL ALSO BE USED AS THE EQUIPMENT MAINTENANCE AND CLEANING AREA, EMPLOYEE PARKING AREA, AND AREA FOR LOCATING PORTABLE FACILITIES, OFFICE TRAILERS, AND TOILET FACILITIES.

6. ALL WASH WATER (CONCRETE TRUCKS, VEHICLE CLEANING, EQUIPMENT CLEANING, ETC.) SHALL BE DISPOSED OF IN A MANNER THAT PREVENTS CONTACT BETWEEN THESE MATERIALS AND STORM WATER THAT IS DISCHARGED FROM THE SITE.

7. SUFFICIENT OIL AND GREASE ABSORBING MATERIALS AND FLOTATION BOOMS SHALL BE MAINTAINED ON SITE OR READLY AVAILABLE TO CONTAIN AND CLEAN-UP FUEL OR CHEMICAL SPILLS AND LEAKS.

8. DUST ON THE SITE SHALL BE CONTROLLED BY SPRAYING WATER ON DRY AREAS OF THE SITE. THE USE OF MOTOR OILS AND OTHER PETROLEUM BASED OR TOXIC LIQUIDS FOR DUST SUPPRESSION OPERATIONS IS PROHIBITED.

9. RUBBISH, TRASH, GARBAGE, LITTER, OR OTHER SUCH MATERIALS SHALL BE DEPOSITED INTO SEALED CONTAINERS. MATERIALS SHALL BE PREVENTED FROM LEAVING THE PREMISES THROUGH THE ACTION OF WIND OR STORMWATER DISCHARGE INTO DRAINAGE DITCHES OR WATERS OF THE STATE.

10. ALL EROSION CONTROL MEASURES PRESENTED ON THIS PLAN SHALL BE INITIATED AS SOON AS PRACTICABLE.

11. DISTURBED PORTIONS OF THE SITE WHERE CONSTRUCTION ACTIVITY HAS STOPPED FOR AT LEAST 14 DAYS, SHALL BE TEMPORARILY SEEDED. AREAS SHALL BE SEEDED NO LATER THAN 14 DAYS FROM THE LAST CONSTRUCTION ACTIVITY OCCURRING IN THESE AREAS OR AS REQUIRED BY THE PERMIT.

12. DISTURBED PORTIONS OF THE SITE WHERE CONSTRUCTION ACTIVITY HAS PERMANENTLY STOPPED SHALL BE PERMANENTLY SEEDED. THESE AREAS SHALL BE SEEDED NO LATER THAN 14 DAYS AFTER THE LAST CONSTRUCTION ACTIVITY OCCURRING IN THESE AREAS. REFER TO THE GRADING PLAN AND/OR LANDSCAPE PLAN.

13. IF THE ACTION OF VEHICLES TRAVELING OVER THE GRAVEL CONSTRUCTION ENTRANCES IS NOT SUFFICIENT TO REMOVE THE MAJORITY OF DIRT OR MUD, THEN THE TIRES MUST BE WASHED BEFORE THE VEHICLES ENTER A PUBLIC ROAD. IF WASHING IS USED, PROVISIONS MUST BE MADE TO INTERCEPT THE WASH WATER AND TRAP THE SEDIMENT BEFORE IT IS CARRIED OFF THE SITE.

14. ALL MATERIALS SPILLED, DROPPED, WASHED, OR TRACKED FROM VEHICLES ONTO ROADWAYS OR INTO STORM DRAINS MUST BE REMOVED IMMEDIATELY.

15. CONTRACTORS OR SUBCONTRACTORS WILL BE RESPONSIBLE FOR REMOVING SEDIMENT IN ANY POND/TRAP AND ANY SEDIMENT THAT MAY HAVE COLLECTED IN THE STORM SEWER DRAINAGE SYSTEMS IN CONJUNCTION WITH THE STABILIZATION OFTHE SITE.

16. ON-SITE & OFF-SITE SOIL STOCKPILE AND BORROW AREAS SHALL BE PROTECTED FROM EROSION AND SEDIMENTATION THROUGH IMPLEMENTATION OF BEST MANAGEMENT PRACTICES. STOCKPILE AND BORROW AREA LOCATIONS SHALL BE FIELD-LOCATED AND NOTED ON THE SITE MAP AND PERMITTED IN ACCORDANCE WITH GENERAL PERMIT REQUIREMENTS.

17. SLOPES SHALL BE LEFT IN A ROUGHENED CONDITION DURING THE GRADING PHASE TO REDUCE RUNOFF VELOCITIES AND EROSION.

18. DUE TO THE GRADE CHANGES DURING THE DEVELOPMENT OF THE PROJECT, THE CONTRACTOR SHALL BE RESPONSIBLE FOR ADJUSTING THE EROSION CONTROL MEASURES (SILT FENCES ETC.) TO PREVENT EROSION.

19. ALL CONSTRUCTION SHALL BE STABILIZED AT THE END OF EACH WORKING DAY, THIS INCLUDES BACKFILLING OF TRENCHES FOR UTILITY CONSTRUCTION AND PLACEMENT OF GRAVEL OR BITUMINOUS PAVING FOR ROAD CONSTRUCTION.

20. IF SOIL STOCKPILING IS EMPLOYED ON THE SITE, SILT FENCES SHALL BE USED TO HELP CONTAIN THE SEDIMENT.

21. SEDIMENT BASINS ARE ATTRACTIVE TO CHILDREN AND CAN BE VERY DANGEROUS. IN ALL CASES, LOCAL ORDINANCES AND REGULATIONS REGARDING HEALTH AND SAFETY MUST BE ADHERED TO.

22. ALL TEMPORARY EROSION AND SEDIMENT CONTROL MEASURES SHALL BE DISPOSED OF WITHIN 30 DAYS AFTER FINAL STABILIZATION. FINAL STABILIZATION HAS OCCURRED WHEN ALL SOIL DISTURBING ACTIVITIES ARE COMPLETED AND A UNIFORM PERENNIAL VEGETATIVE COVER WITH A DENSITY OF 70% OF THE COVER FOR UNPAVED AREAS AND AREAS NOT COVERED BY PERMANENT STRUCTURES HAS BEEN EMPLOYED.

SEQUENCE OF CONSTRUCTION - PHASE 2:

1. MAINTAIN ALL BMP'S. CHECK ALL SILT FENCES AND REPAIR AS NECCESARY. ASSURE ANY ERODED AREAS ARE STABILIZED.
2. CONTINUE GRADING THE SITE.
3. EXCAVATE TANK AREA AND INSTALL TANKS
4. BEGIN CONSTRUCTION OF BUILDING PAD AND STRUCTURES.
5. TEMPORARILY SEED DENUDED AREAS AS NECESSARY.
6. INSTALL UTILITIES, UNDERDRAINS, CURBS AND GUTTERS.
7. PREPARE SITE FOR PAVING AND PAVE SITE
8. COMPLETE GRADING AND INSTALL PERMANENT SEEDING AND PLANTING.
9. CONVERT SEDIMENT TRAP INTO PERMANENT STORMWATER MANAGEMENT FACILITY.
10. REMOVE ALL TEMPORARY EROSION AND SEDIMENT CONTROL DEVICES (ONLY IF SITE IS STABILIZED).

CAUTION

FLORIDA CALL UTILITY LOCATION SERVICE

3 DAYS BEFORE DIGGING CALL TOLL FREE 1-800-432-4770 OR 811

A ONE CALL SYSTEM FOR COMMUNITY AND JOB SAFETY.

*** CAUTION ***

THE UNDERGROUND UTILITIES SHOWN HAVE BEEN LOCATED FROM FIELD SURVEY INFORMATION AND EXISTING DRAWINGS. THE SURVEYOR MAKES NO GUARANTEE THAT THE UNDERGROUND UTILITIES SHOWN COMPRISE ALL SUCH UTILITIES IN THE AREA, EITHER SHOWN OR UNMARKED, WHICH MAY BE ENCOUNTERED. HE DOES NOT WARRANT THAT THE UNDERGROUND UTILITIES SHOWN ARE IN THE EXACT LOCATION INDICATED, ALTHOUGH HE DOES CERTIFY THAT THEY ARE LOCATED AS ACCURATELY AS POSSIBLE FROM INFORMATION AVAILABLE. THE SURVEYOR HAS NOT PHYSICALLY LOCATED THE UNDERGROUND UTILITIES.

N

0 20 40 60

SCALE: 1" = 20'

REVISIONS

ISSUED	COMMENT

COMMERCIAL SITE SOLUTIONS, INC.
SITE PLANNING • ENGINEERING
5032 TAMPA WEST BLVD.
TAMPA, FL 33634
813-885-2052
813-882-4372 (FAX)
402 EAST 1ST AVENUE
EASLEY, SC 29640
864-855-5200

PREPARED FOR:
MURPHY OIL USA, INC.
422 NORTH WASHINGTON AVENUE
EL DORADO, AR 71730
PH: 870-875-7629

EROSION CONTROL PLAN - PHASE 2

MURPHY OIL USA
WILDWOOD, FL
EAST COUNTY ROAD 466
WILDWOOD, FL

Date:	5/25/10
Drawn:	MGL
Checked:	---

C-10
Sheet

Construction Specifications For Silt Fence

Materials

1. *Synthetic filter fabric shall be a pervious sheet of propylene, nylon, polyester, or polyethylene yarn. It shall contain ultraviolet ray inhibitors and stabilizers to provide a minimum of 6 months of expected usable construction life at a temperature range of 0°F. to 120°F. (-17°C. to 49°C.).*
2. *The stakes for a silt fence shall be 1 x 2 inches (2.5 x 5 cm) wood (preferred), or equivalent metal with a minimum length of 3 feet (90 cm).*
3. *Wire fence reinforcement for silt fences using standard-strength filter cloth shall be a minimum of 36 inches (90 cm) in height, shall be a minimum of 14 gauge, and shall have a maximum mesh spacing of 6 inches (15 cm).*

Sheetflow Application: Silt Fence

This sediment barrier uses standard-strength or extra-strength synthetic filter fabrics. It is designed for situations in which only sheet or overland flows are expected (see **Figures 4.4a** and **4.4b**):

1. *The height of a silt fence shall not exceed 36 inches (90 cm). Higher fences may impound volumes of water sufficient to cause failure of the structure.*
2. *The filter fabric shall be purchased in a continuous roll cut to the length of the barrier to avoid the use of joints. When joints are necessary, filter cloth shall be spliced as described in Item 8 below.*
3. *Posts shall be spaced a maximum of 10 feet (3 m) apart at the barrier location and driven securely into the ground a minimum of 12 inches (30 cm). When extra-strength fabric is used without the wire support fence, post spacing shall not exceed 6 feet (1.8 m).*
4. *A trench shall be excavated approximately 4 inches (10 cm) wide and 4 inches (10 cm) deep along the line of posts and upslope from the barrier.*
5. *When standard-strength filter fabric is used, a wire mesh support fence shall be fastened securely to the upslope side of the posts using heavy-duty wire staples at least 1 inch (25 mm) long, tie wires, or hog rings. The wire shall extend into the trench a minimum of 2 inches (5 cm) and shall not extend more than 36 inches (90 cm) above the original ground surface.*
6. *The standard-strength filter fabric shall be stapled or wired to the fence, and 8 inches (20 cm) of the fabric shall be extended into the trench. The fabric shall not extend more than 36 inches (90 cm) above the original ground surface.*
7. *When extra-strength filter fabric and closer post spacing are used, the wire mesh support fence may be eliminated. In this case, the filter fabric is stapled or wired directly to the posts with all other provisions of Item 6 applying.*
8. *When attaching 2 silt fences together, place the end post of the second fence inside the end post of the first fence. Rotate both posts at least 180 degrees in a clockwise direction to create a tight seal with the filter fabric. Drive both posts into the ground and bury the flap (see **Figure 4.4b**).*
9. *The trench shall be backfilled and the soil compacted over the filter fabric.*
10. *The most effective application consists of a double row of silt fences spaced a minimum of 3 feet apart, so that if the first row collapses it will not fall on the second row. Wire or synthetic mesh may be used to reinforce the first row (see **Figure 4.4c**).*
11. *When used to control sediments from a steep slope, silt fences should be placed away from the toe of the slope for increased holding capacity (see **Figure 4.4d**).*
12. *Silt fences shall be removed when they have served their useful purpose, but not before the upslope area has been permanently stabilized.*

Maintenance

1. *Silt fences shall be inspected within 24 hours after each ½-inch rainfall event and at least once a week. Any required repairs shall be made immediately.*
2. *Should the fabric on a silt fence decompose or become ineffective before the end of the expected usable life and the barrier is still necessary, the fabric shall be replaced promptly.*
3. *Sediment deposits should be removed when deposits reach approximately one-half the height of the barrier.*
4. *Any sediment deposits remaining in place after the silt fence is no longer required shall be dressed to conform with the existing grade, prepared, and seeded.*

CHAPTER 4: BEST MANAGEMENT PRACTICES FOR EROSION AND SEDIMENTATION CONTROL

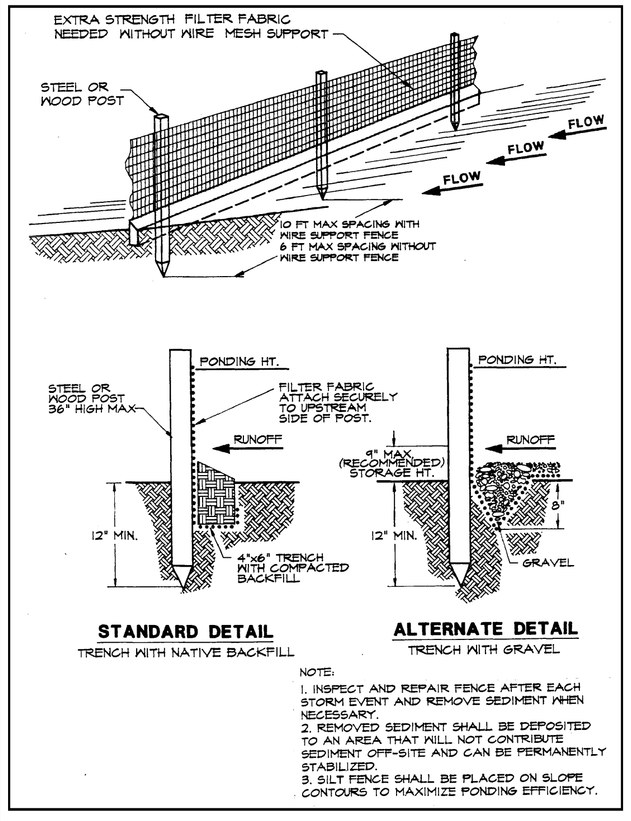

Figure 4.4a. Silt Fence
Source: Erosion Draw

CHAPTER 4: BEST MANAGEMENT PRACTICES FOR EROSION AND SEDIMENTATION CONTROL

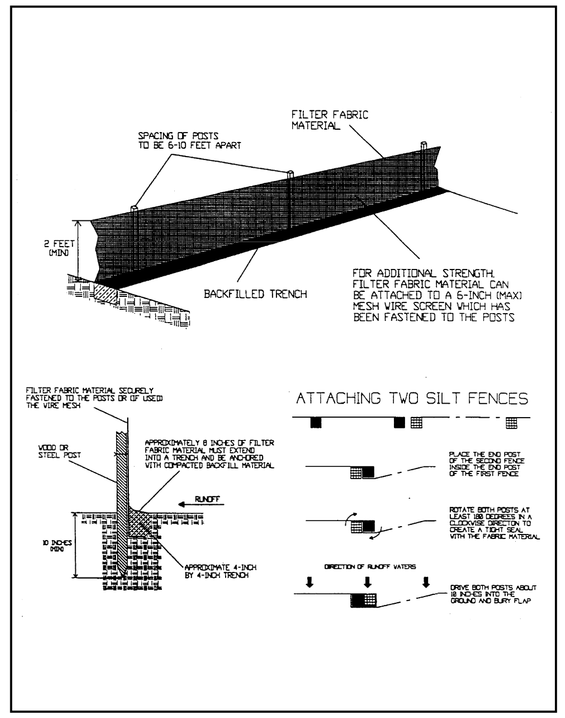

Figure 4.4b. Installing a Filter Fabric Silt Fence
Source: HydroDynamics, Inc.

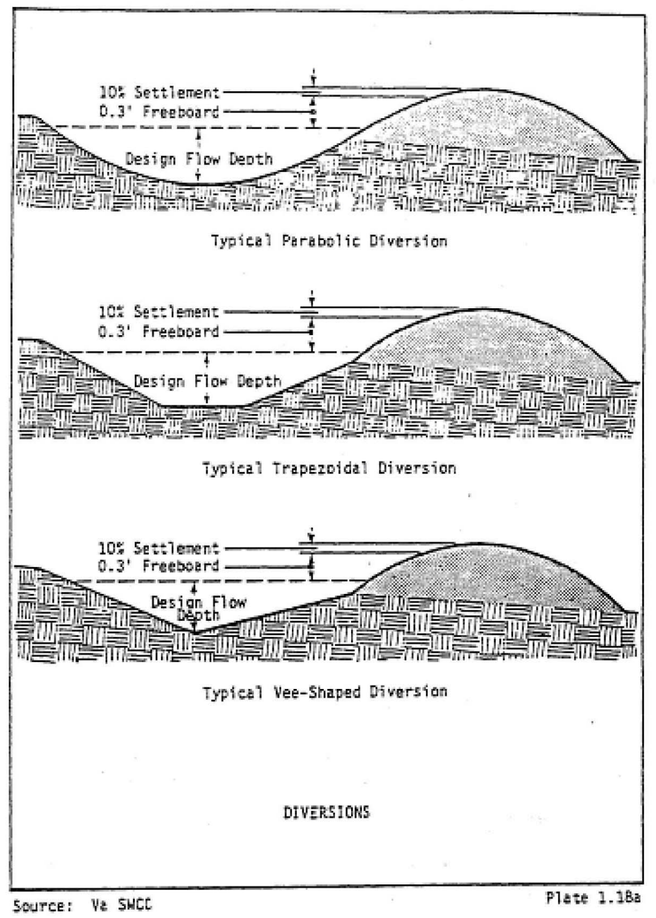

Construction Specifications

1. All trees, brush, stumps, debris, and other obstructions shall be removed and disposed of so as not to interfere with the proper functioning of the diversion.
2. The diversion shall be excavated or shaped to line, grade, and crosssection as required to meet the criteria specified herein, free of irregularities which will impede flow.
3. Fills shall be compacted as needed to prevent unequal settlement that would cause damage in the complete diversion.
4. All earth removed and not needed in construction shall be spread or disposed of so that it will not interfere with the functioning of the diversion.
5. Permanent stabilization of disturbed areas shall be done in accordance with the applicable standard and specification contained in this handbook. Permanent stabilization techniques include PERMANENT SEEDING (ES BMP 1.66) and SODDING.. (ES BMP 1.67).

Maintenance
Before final stabilization, the diversion should be inspected after every rainfall. Sediment shall be removed from the ditchline and repairs made as necessary. Seeded areas which fail to establish a vegetative cover shall be reseeded as necessary.

CHAPTER 4: BEST MANAGEMENT PRACTICES FOR EROSION AND SEDIMENTATION CONTROL

4.3 Stabilized Construction Exit

Conditions Where Practice Applies

Wherever traffic will be leaving a construction site and moving directly onto a public road or other paved area.

Design Criteria

Aggregate Size

If stone is utilized, FDOT No. **1** Coarse Aggregate, 1½ to 3½ inch (4 to 9 cm) stone is suggested. Wood chips may be used for single-family residential construction, provided that they can be prevented from floating away during a storm event. Manufactured products also are available to prevent or reduce the amount of sediment tracked onto roadways. If a stabilized exit is not sufficient, street sweeping can be provided as an additional measure.

Dimensions

If stone is used, then the aggregate layer must be at least 6 inches (15 cm) thick. It must extend the **FULL WIDTH** of the vehicular ingress and egress area. The length of the entrance must be at least 50 feet (20 m). The exit should widen at its connection to the roadway to accommodate the turning radius of large trucks (see **Figure 4.3a**).

Washing

If conditions on the site are such that most of the mud is not removed by the vehicles traveling over the stone, then the vehicle tires must be washed before entering a public road. Wash water must be carried away from the entrance to a settling area to remove sediment (see **Figure 4.3b**). A wash rack may also be used to make washing more convenient and effective (see **Figure 4.3c**).

CHAPTER 4: BEST MANAGEMENT PRACTICES FOR EROSION AND SEDIMENTATION CONTROL

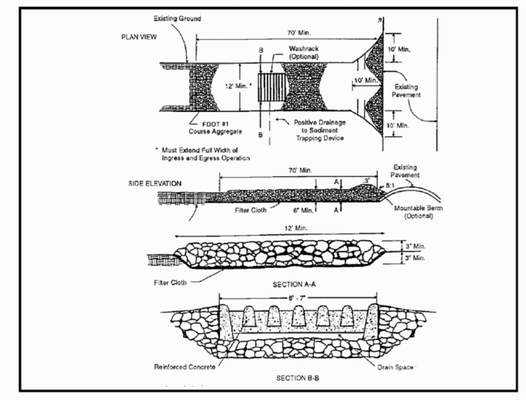

Figure 4.3c. Construction Entrance with Wash Rack
Source: 1983 Maryland Standards for Soil Erosion and Sediment Control

Location

The entrance should be located to provide for maximum utility by all construction vehicles.

Construction Specifications

The entrance area should be cleared of all vegetation, roots, and other objectionable material. A geotextile should be laid down to improve stability and simplify maintenance when gravel is used. The gravel shall then be placed over the geotextile to the specified dimensions.

Maintenance

The stabilized construction exit shall be maintained in a condition that will prevent the tracking or flow of mud onto public rights of way. This may require periodic maintenance as conditions demand, and the repair and/or cleanout of any structures used to trap sediments. All materials spilled, dropped, washed, or tracked from vehicles onto roadways or into storm drains must be removed immediately. Look for signs of trucks and trailered equipment "cutting corners" where the construction exit meets the roadway. Sweep the paved road as needed.

CHAPTER 4: BEST MANAGEMENT PRACTICES FOR EROSION AND SEDIMENTATION CONTROL

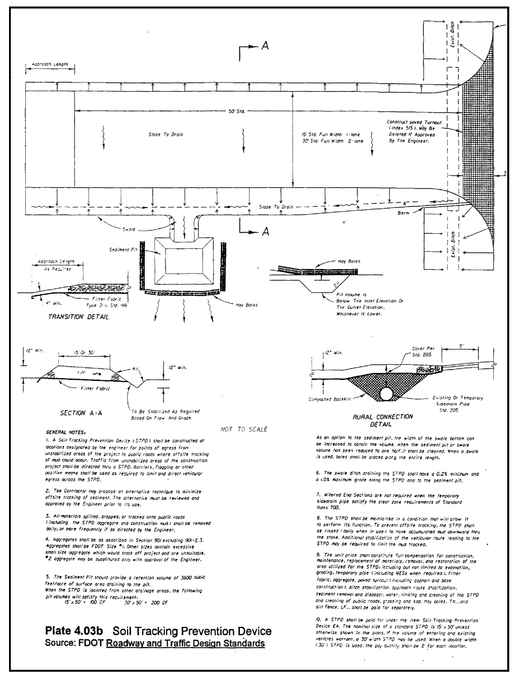

Plate 4.03b Soil Tracking Prevention Device
Source: FDOT Roadway and Traffic Design Standards

Figure 4.3b. Soil Tracking Prevention Device
Source: FDOT Roadway and Traffic Design Standards

CHAPTER 4: BEST MANAGEMENT PRACTICES FOR EROSION AND SEDIMENTATION CONTROL

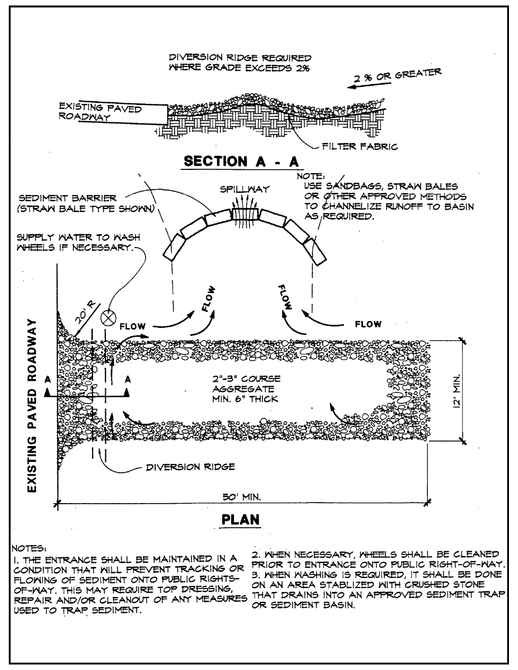

Figure 4.3a. Temporary Gravel Construction Entrance
Source: Erosion Draw

CHAPTER 4: BEST MANAGEMENT PRACTICES FOR EROSION AND SEDIMENTATION CONTROL

4.5 Storm Drain Inlet Protection

Condition Where Practice Applies

Where storm drain inlets are to be made operational before permanent stabilization of the disturbed drainage area. Different types of structures are applicable to different conditions (see **Figures 4.5a** through **4.5j**).

Design Criteria

1. *The drainage area shall be no greater than 1 acre (0.4 ha).*
2. *The inlet protection device shall be constructed to facilitate the cleanout and disposal of trapped sediment and to minimize interference with construction activities.*
3. *The inlet protection devices shall be constructed so that any resultant ponding or stormwater will not cause excessive inconvenience or damage to adjacent areas or structures.*
4. ***Figures 4.5a** through **4.5j** provide specific design criteria for each particular inlet protection device.*

Construction Specifications

Fabric Drop Inlet Sediment Filter

1. *Fabric shall be cut from a continuous roll to avoid joints.*
2. *Stakes shall be 2 x 4 inches (5 x 10 cm) wood (preferred) or equivalent metal with a minimum length of 3 feet (90 cm) (see **Figure 4.5a**).*
3. *Staples shall be of heavy duty wire at least ½ inch (13 mm) long.*
4. *Stakes shall be spaced around the perimeter of the inlet a maximum of 3 feet (90 cm) apart and securely driven into the ground a minimum of 8 inches (20 cm). A frame of 2 x 4 inches (5 x 10 cm) of wood shall be constructed around the top of the stakes for proper stability.*
5. *A trench shall be excavated approximately 4 inches (10 cm) wide and 4 inches (10 cm) deep around the outside perimeter of the stakes (see **Figure 4.5b**).*
6. *The fabric shall be stapled to the wooden stakes, and 8 inches (20 cm) of the fabric shall be extended into the trench. The height of the filter barrier shall be a minimum of 15 inches (38 cm) and shall not exceed 18 inches (45 cm).*
7. *The trench shall be backfilled and the soil compacted over the fabric.*

CHAPTER 4: BEST MANAGEMENT PRACTICES FOR EROSION AND SEDIMENTATION CONTROL

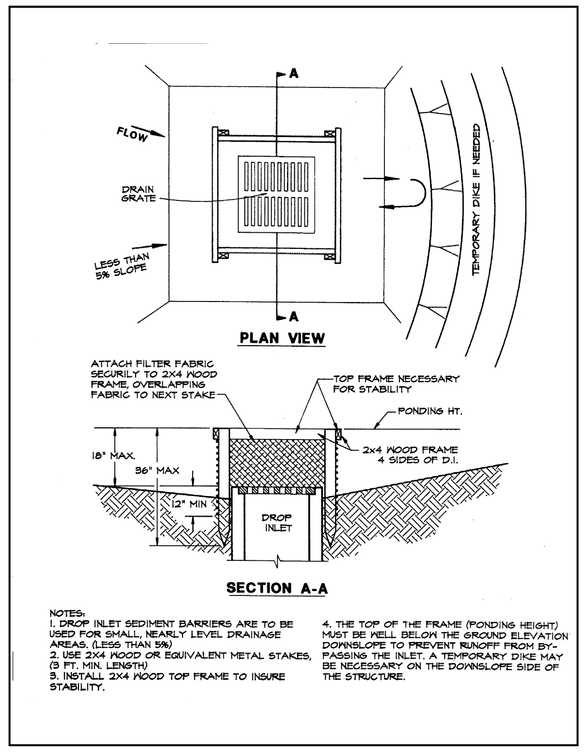

Figure 4.5a. Silt Fence Drop Inlet Sediment Barrier
Source: Erosion Draw

CHAPTER 4: BEST MANAGEMENT PRACTICES FOR EROSION AND SEDIMENTATION CONTROL

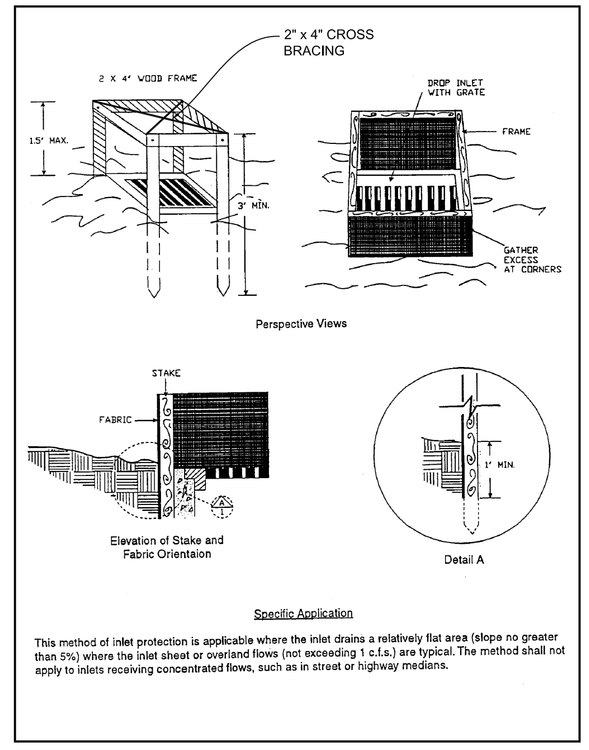

Figure 4.5b. Filter Fabric Drop Inlet Sediment Filter
Source: North Carolina Erosion and Sediment Control Manual

CAUTION

FL ONE CALL: UTILITY LOCATOR SERVICE
3 DAYS BEFORE DIGGING CALL TOLL FREE 1-800-432-4770 OR 811
A ONE CALL SYSTEM FOR COMMUNITY AND JOB SAFETY.

*** CAUTION ***
THE UNDERGROUND UTILITIES SHOWN HAVE BEEN LOCATED FROM FIELD SURVEY OBSERVATION AND/OR RECORD INFORMATION. THE SURVEYOR MAKES NO GUARANTEE THAT THE UNDERGROUND UTILITIES SHOWN COMPRISE ALL SUCH UTILITIES IN THE AREA, EITHER SHOWN OR OMITTED FROM THIS SURVEY. THE SURVEYOR DOES NOT WARRANT THAT THE UNDERGROUND UTILITIES SHOWN ARE IN THE EXACT LOCATION INDICATED, ALTHOUGH HE DOES CERTIFY THAT THEY ARE LOCATED AS ACCURATELY AS POSSIBLE FROM INFORMATION AVAILABLE. THE SURVEYOR HAS NOT PHYSICALLY LOCATED THE UNDERGROUND UTILITIES.

REVISIONS

ISSUED	COMMENT

COMMERCIAL SITE SOLUTIONS, INC.
SITE PLANNING • ENGINEERING
402 EAST 1ST AVENUE
EASLEY, SC 29640
864-855-5200
5032 TAMPA WEST BLVD.
TAMPA, FL 33634
813-885-2052
813-882-4372 (FAX)

PREPARED FOR:
MURPHY OIL USA, INC.
422 NORTH WASHINGTON AVENUE
EL DORADO, AR 71730
PH: 870-875-7629

EROSION CONTROL DETAILS

MURPHY OIL USA
WILDWOOD, FL
EAST COUNTY ROAD 466
WILDWOOD, FL

Date: 5/25/10
Drawn: RSM
Checked: MGL

C-11
Sheet

7.6 Sodding

Conditions Where Practice Applies

1. *Disturbed areas that require immediate vegetative covers, or where sodding is preferred to other means of grass establishment.*
2. *The following locations are particularly suited to stabilization with sod:*
   a. Slopes and buffer strips.
   b. Waterways and swales, especially around drop inlets.
   c. Residential or commercial lawns where quick use or aesthetics are factors.

Specifications

Soil Preparation

1. *Prior to soil preparation, areas to be sodded shall be brought to final grade in accordance with the approved plan. These operations should leave as much topsoil as possible or replace the topsoil to a depth of 4 inches (10 cm) (see **Figure 7.6a**).*
2. *Soil tests should be carried out to determine the exact requirements for lime. They may be conducted by the state Soil Testing Laboratory at the University of Florida or a reputable commercial laboratory. Information on state soil tests is available from county Cooperative Extension agents.*

   *When a soil test is not carried out, pulverized **agricultural limestone** may be added at a rate of 100 pounds per 1,000 square feet (2 tons/acre).*
3. *Before sod is laid, the soil surface shall be clear of trash, debris, roots, branches, stones, and clods more than 2 inches (5 cm) in length or diameter. Sod shall not be applied to gravel or other non-soil surfaces.*
4. *Any irregularities in the soil surface resulting from topsoil or other operations shall be filled or leveled to prevent the formation of depressions or water pockets.*
5. *Areas to be topsoiled and the topsoil used shall fulfill the requirements of **TOPSOILING** (in this chapter). No sod shall be spread on soil that has been treated with soil sterilants until enough time has elapsed to permit the dissipation of toxic materials.*

Sod Quality

1. *Sod should be free of weeds and undesirable coarse weedy grasses. If possible, **Certified** or **Approved** turfgrass sod should be used.*
2. *Sod shall be machine cut at a uniform soil thickness of ¾ inch (20 mm), plus or minus ¼ inch (6 mm), at the time of cutting. This thickness shall exclude shoot growth and thatch.*
3. *Pieces of sod shall be cut to the supplier's standard width and length, with a maximum allowable deviation in any dimension of 5%. Torn or uneven pads are not acceptable.*
4. *Standard-size sections of sod shall be strong enough to support their own weight and retain their size and shape when suspended from a firm grasp on one end of the section.*
5. *Sod shall not be cut or laid in excessively wet or dry weather.*
6. *Sod shall be harvested, delivered, and installed within 36 hours.*

Installation

Solid Sodding

1. *Irrigate areas to be sodded with a minimum of ½ inch (13 mm) of water, unless recent rains have provided an equivalent amount of moisture (see **Figure 7.6b**).*
2. *The first row of sod shall be laid in a straight line, with subsequent rows placed parallel to and butting tightly against each other. Lateral joints shall be staggered to promote more uniform growth and strength. Care shall be exercised to ensure that the sod is not stretched or overlapped and that all joints are butted tightly to prevent voids that would dry out the roots.*
3. *On slopes of 3:1 or greater, or wherever erosion may be a problem, sod shall be laid with staggered joints and secured by pegging or other approved methods. Sod shall be installed with the length perpendicular to the slope (on the contour). Begin laying sod at the bottom of the slope and work uphill. On very steep slopes, the use of ladders facilitates the work and prevents damage to the sod.*
4. *Surface water flow cannot always be diverted from the face of the slope, but a capping strip of heavy jute or erosion netting, properly secured, along the crown of the slope provides extra protection against the lifting and undercutting of sod. The same technique is used to fortify sod in water-carrying channels and other critical areas. Use wire staples to anchor heavy jute or erosion netting in channels.*
5. *As the sodding of clearly defined areas is completed, sod shall be rolled or tamped to provide firm contact between roots and soil.*
6. *After rolling, sod shall be irrigated deeply enough that the underside of the sod pad and the soil 4 inches (10 cm) below the sod are thoroughly wet.*
7. *During the first week, in the absence of adequate rainfall, watering shall be performed as often as necessary to maintain moist soil to a depth of at least 4 inches (10 cm).*
8. *The first mowing shall not be attempted until the sod is firmly rooted, usually after 2 to 3 weeks. Not more than one-third of the grass leaf should be removed at any one cutting.*
9. *Two to 4 weeks after sod is laid, fertilize at an application rate of 300 pounds per acre or 6.7 pounds per 1,000 square feet with 15-0-15 or 15-2-15 slow release.*

Spot Sodding

1. *Spot sodding is the planting of plugs or blocks, a minimum of 4 inches (10 cm) in diameter or square, of sod at measured intervals. The plugs or blocks should be placed 1 foot (30 cm) apart.*
2. *Sod spots in a row should be placed alternately and not directly opposite sod spots in adjacent rows.*
3. *Fit the plugs or blocks tightly into the prepared holes and tamp them firmly into place.*
4. *Irrigate deeply enough that the underside of the sod spot and the soil 4 inches (10 cm) below the sod are thoroughly wet.*

Strip Sodding

1. *Areas to be strip sodded should be fertilized, limed, prepared, and smoothed as in solid sodding.*
2. *Lay the strips end to end in rows 1 to 1½ feet (30 to 45 cm) apart, with the strips a minimum of 2 to 4 inches (5 to 10 cm) wide.*
3. *Roll or tamp the strips thoroughly to create firm contact between roots and soil.*
4. *Irrigate deeply enough that the underside of the strips and the soil 4 inches (10 cm) below the strips are wet.*

Sodded Swales and Waterways

1. *Care should be taken to prepare the soil adequately in accordance with this specification. The sod type shall consist of plant materials able to withstand the designed velocity (see **STORMWATER CONVEYANCE CHANNEL**) (in Chapter 6).*
2. *Sod strips in swales and waterways shall be laid perpendicular to the direction of flow. Care should be taken to butt the ends of the strips tightly.*
3. *After rolling or tamping, sod shall be pegged or stapled to resist washout during the establishment period. Chicken wire, jute, or other netting may be pegged over the sod for extra protection in critical areas.*
4. *All other specifications for this practice shall be adhered to when sodding a swale or waterway.*

Maintaining Established Sod

1. *After the first week, sod shall be watered as necessary to maintain adequate moisture in the root zone and prevent dormancy.*
2. *Apply lime and fertilizer under a regular program based on soil tests and on the use and general appearance of the vegetative cover. In the absence of a soil test, apply 1 to 2 tons per acre (45 to 90 pounds/ 1,000 square feet) (2.24 to 4.48 t/ha) of finely ground agricultural limestone every 3 years. Apply 300 pounds per acre (6.7 pounds/1,000 square feet) of 15-0-15 or 15-2-15 slow-release fertilizer in the spring and fall.*
3. *Mow to control weeds, improve the appearance of the vegetative cover, and reduce fire hazard, as necessary. In general, the coarser the leaf texture of the grass, the higher it should be cut. Continuous, close mowing results in a loss of vigor and reduced stand. No more than one-third of the grass leaf should be removed in any mowing.*

CHAPTER 7: BEST MANAGEMENT PRACTICES-VEGETATION FOR EROSION CONTROL

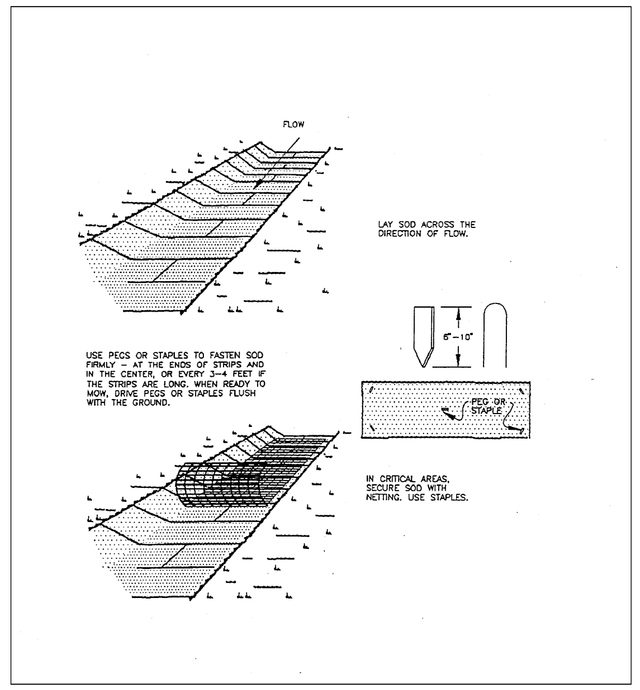

Figure 7.6b. Sodding Swales and Waterways
Source: Virginia DSWC

CHAPTER 7: BEST MANAGEMENT PRACTICES-VEGETATION FOR EROSION CONTROL

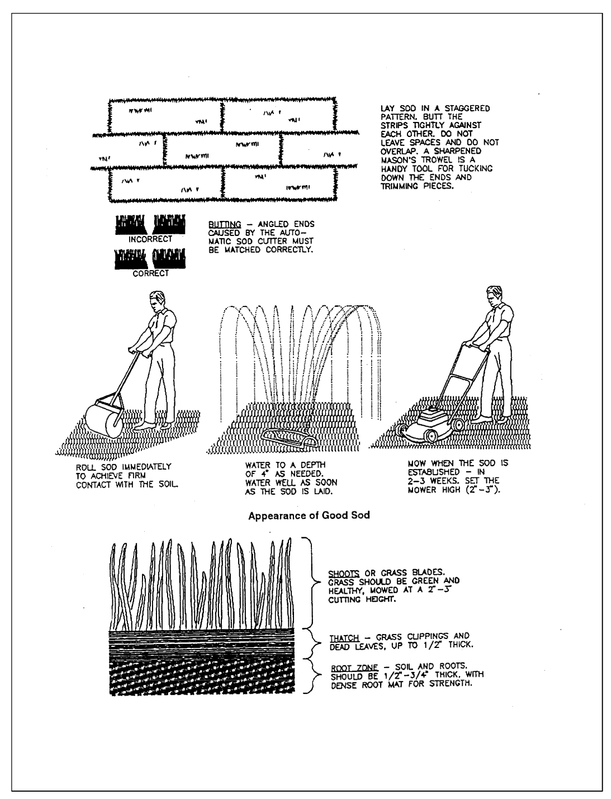

Figure 7.6a. Sodding
Source: Virginia DSWC

7.4 Temporary Seeding

Conditions Where Practice Applies

Where exposed soil surfaces are not to be fine graded for periods of 7 days or more. Such areas include denuded areas, soil stockpiles, berms, dams, the sides of sediment basins, and temporary road banks.

Specifications

Prior to seeding, install necessary erosion control practices such as berms, waterways, and basins.

Plant Selection

Select plants appropriate to the season, region, and site conditions. Consult with your local Agricultural Extension agent, county, FDEP, water management district, or FDOT office, or see Table 1.65a of the *Florida Development Manual*.

Seedbed Preparation

To control erosion on bare soil surfaces, plants must be able to germinate and grow. Seedbed preparation is essential. A soil test should be taken to determine liming and fertilization requirements. In the absence of a soil test, the following guidelines apply:

1. ***Liming** – Where soils are known to be highly acid (pH 6.0 and lower), lime should be applied at the rate of 2 tons of pulverized agricultural limestone per acre.*
2. ***Fertilizer** – Shall be applied as 217.5 pounds per acre (5 pounds/ 1,000 square feet) (504 kg/ha) of 50% slow-release 10-20-20 or equivalent. Lime and fertilizer shall be incorporated into the top 2 to 4 inches (5 to 10 cm) of the soil. If quick-release nitrogen is used, apply 2 to 3 weeks after seed has sprouted.*
3. ***Surface Roughening** – If the area has been recently loosened or disturbed, no further roughening is required. When the area is compacted, crusted, or hardened, the soil surface shall be loosened by discing, raking, harrowing, or other acceptable means (see **SURFACE ROUGHENING** [in this chapter]).*
4. ***Tracking** – Tracking with bulldozer cleats is most effective on sandy soils. This practice often causes the undue compaction of the soil surface, especially in clayey soils, and does not aid plant growth as effectively as other methods of surface roughening.*

Seeding

Seed shall be evenly applied with a cyclone seeder, drill, cultipacker-seeder, or hydroseeder. Small grains shall be planted no more than 1 inch deep. Grasses and legumes shall be planted no more than ¼ inch (6 mm) deep.

Mulching

1. *Mulch should usually be applied to reduce damage from water runoff or wind erosion, and to improve moisture conditions for seedlings. Mulching without seeding should be considered for very short-term protection. The use of mulch is a judgment decision based on the time of seeding and conditions of individual sites. When used, mulch shall be applied according to **MULCHING** (in this chapter).*
2. *Seedings made on slopes in excess of 3:1, or on adverse soil conditions, or during excessively hot or dry weather, shall be mulched according to **MULCHING** (in this chapter).*
3. *Seedings made during optimum spring and summer seeding dates, with favorable soil and site conditions, may not require mulch.*

Reseeding

Areas that fail to establish enough vegetative cover to prevent rill erosion will be filled in with proper topsoil and reseeded as soon as they are identified.

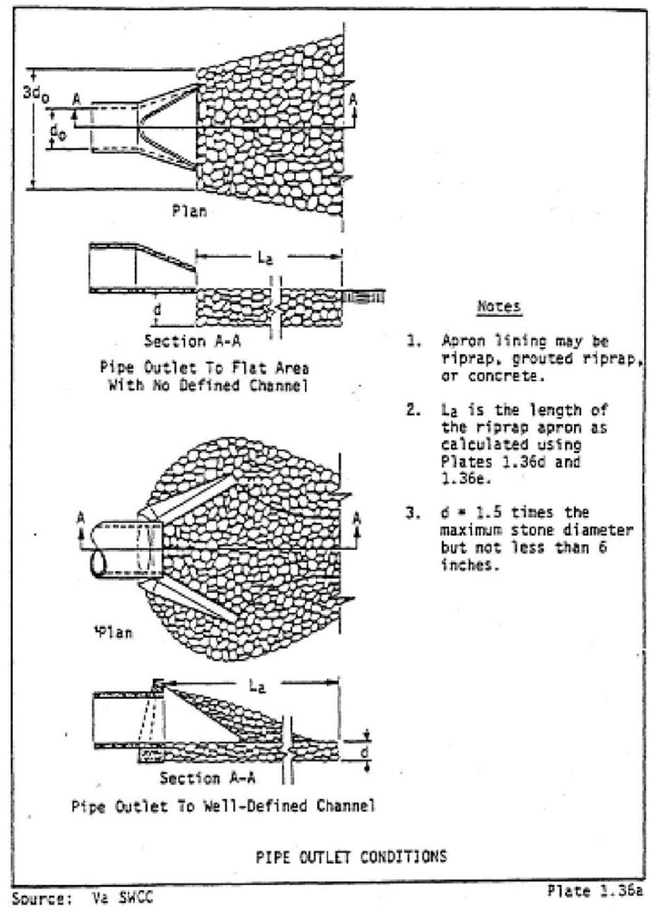

RIP-RAP APRON SIZING CHART						
APRON #	BOTTOM WIDTH	La	TOP WIDTH	d..SIZE	d..SIZE	THICKNESS
1	9.5'	8'	4.5'	6"	9"	14"
2, 3 AND 4	9.5'	8'	4.5'	6"	9"	14"

CHAPTER 7: BEST MANAGEMENT PRACTICES-VEGETATION FOR EROSION CONTROL

7.5 Permanent Seeding

Conditions Where Practice Applies

1. *Disturbed areas where permanent, long-lived vegetative cover is needed to stabilize the soil.*
2. *Rough-graded areas that will not be brought to final grade for a year or more.*

Specifications

Selection of Plant Materials

1. *The selection of plant materials is based on climate, topography, soils, land use, and planting season. To determine which plant materials are best adapted to a specific site, see Tables 1.66b and 1.66c of the* Florida Development Manual, *which describe plant characteristics and list recommended varieties.*
2. *Table 1.66a of the* Florida Development Manual *lists appropriate seeding mixtures for various site conditions in Florida. These mixtures are designed for general use and are known to perform well on the sites described. Adhere to these mixtures whenever feasible. Check Tables 1.66b and 1.66c for recommended varieties.*

Seedbed Requirements

Vegetation should not be established on slopes that are unsuitable because of inappropriate soil texture, poor internal structure or internal drainage, a high volume of overland flow, or excessive steepness, until measures have been taken to correct these problems.

To maintain a good stand of vegetation, the soil must meet certain minimum requirements as a growth medium. ***The existing soil must meet the following criteria**:*

1. *Enough fine-grained material to maintain adequate moisture and nutrient supply.*
2. *Sufficient pore space to permit root penetration. A bulk density of 1.2 to 1.5 indicates that sufficient pore space is present. A fine granular or crumb-like structure is also favorable.*
3. *Sufficient depth to provide an adequate root zone. The depth to rock or impermeable layers such as hardpans shall be 12 inches (30 cm) or more, except on slopes steeper than 2:1, where the addition of soil is not feasible.*
4. *A favorable pH range for plant growth. If the soil is so acid that a pH range of 6.0 to 7.0 cannot be attained by the addition of pH-modifying materials, then the soil is unsuitable for plant roots.*
5. *Freedom from toxic amounts of materials harmful to plant growth.*
6. *Freedom from excessive quantities of roots, branches, large stones, large clods of earth, or trash of any kind. Clods and stones may be left on slopes steeper than 3:1 if they are to be hydroseeded.*

If any of the above criteria cannot be met—i.e., if the existing soil is too coarse, dense, shallow, acid, or contaminated to foster vegetation—then topsoil should be applied in accordance with **TOPSOILING** (in this chapter). The necessary mechanical erosion and sediment control practices ***will be installed prior to seeding**.* Grading will be carried out according to the approved plan. Surfaces will be roughened in accordance with **SURFACE ROUGHENING** (in this chapter).

Soil Conditioners

To modify the texture, structure, or drainage characteristics of a soil, the following materials ***may*** be added to the soil:

1. ***Peat** shall be sphagnum moss peat, hypnum moss peat, reed-sedge peat, or peat humus, from freshwater sources. Peat shall be shredded and conditioned in storage piles for at least 6 months after excavation.*
2. ***Sand** shall be clean and free of toxic materials.*
3. ***Vermiculite** shall be horizontal grade and free of toxic substances.*
4. ***Composted manure** shall be stable or cattle manure not containing undue amounts of straw or other bedding materials or toxic chemicals. Phosphorus shall be limited to soil test recommendations.*
5. ***Thoroughly rotted sawdust** shall be 6 pounds of nitrogen added to each cubic yard (3.5 kg/m^3) and shall be free of stones, sticks, and toxic substances.*
6. *Where local ordinances permit, **treated sewage sludge** may be used in accordance with local, state, and federal regulations. The use of treated sewage sludge shall be limited to soil test recommendations.*

Lime and Fertilizer

Lime and fertilizer needs should be determined by soil tests. Soil tests may be performed by the Cooperative Extension Service Soil Testing Laboratory at the University of Florida, or by a reputable commercial laboratory. Information on the state's Soil Testing Laboratory is available from county extension agents. Under unusual conditions where it is not possible to obtain a soil test, the following soil amendments will be applied:

LIME: 2 tons per acre finely ground agricultural or dolomitic limestone (90 pounds per 1,000 square feet) (4.48 t/ha)

FERTILIZER: **Mixed grasses and legumes:** 150 pounds per acre of 5-25-10 (3.5 pounds per 1,000 square feet)

Legume stands only: 150 pounds per acre of 5-20-10 (3.5 pounds per 1,000 square feet)

Grass stands only: 870 pounds per acre of 5-5-10 (1.12 t/ha) and 57 pounds of 38-0-0 in spring (1.3 pounds per 1,000 square feet)

220 pounds per acre of 10-5-10 and 57 pounds of 38-0-0 in fall (1.3 pounds per 1,000 square feet)

Other fertilizer formulations may be used, provided they supply the same amounts and proportions of plant nutrients.

Lime and fertilizer shall be incorporated into the top 4 to 6 inches (10 to 15 cm) of the soil by discing or other means. When applying lime and fertilizer with a hydroseeder, apply to a rough, loose surface.

Seeding

1. ***Certified seed** should be used for all permanent seeding whenever possible.*
2. ***Legume seed** should be inoculated with the inoculant appropriate to the species. The seed of lespedezas, crown vetch, and clovers should be scarified to promote uniform germination.*
3. ***Apply seed uniformly** with a cyclone seeder, drill, cultipacker-seeder, or hydroseeder on a firm, friable seedbed. The maximum seeding depth should be ½ inch.*
4. *During **hydroseeding**, to avoid seed damage, it is recommended that if a machinery breakdown of 30 minutes to 2 hours occurs, 50% more seed be added to the tank, based on the proportion of the slurry remaining in the tank. Beyond 2 hours, a full rate of new seed may be necessary.*

   Often hydroseeding contractors prefer not to apply lime in their rigs, as it is abrasive. In inaccessible areas, lime may have to be applied in pelletized or liquid form, separately. The rates of wood fiber should be at least 2,000 pounds per acre (2.24 t/ha). Surface roughening is particularly important when hydroseeding, as a roughened slope provides some natural coverage of lime, fertilizer, and seed.
5. ***Legume inoculants** should be used by the date indicated on the container. When dry seeding, use 4 times the manufacturer's recommended rate, and use 10 times the recommended rate of inoculant when hydroseeding.*

SEDIMENT TRAP

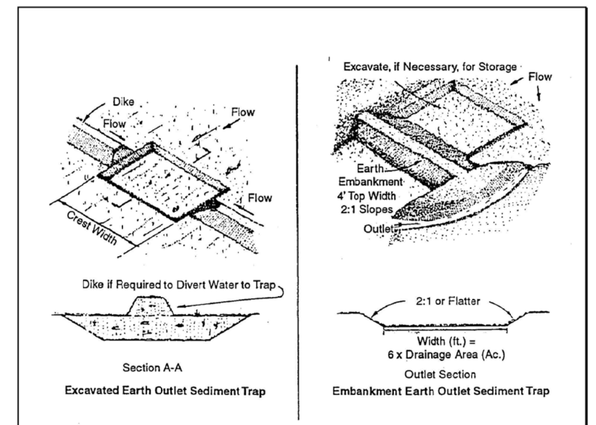

Construction Specifications

1. Area under embankment shall be cleared, grubbed and stripped of any vegetation and root mat. The pool area shall be cleared.
2. The fill material for the embankment shall be free of roots or other woody vegetation as well as over-sized stones, rocks, organic material, or other objectionable material. The embankment shall be compacted by traversing with equipment while it is being constructed.
3. Sediment shall be removed and trap restored to its original dimensions when the sediment has accumulated to 1/2 the design depth of the trap. Removed sediment shall be deposited in a suitable area and in such a manner that it will not erode.
4. The structure shall be inspected after each rain and repairs made as needed.
5. Construction operations shall be carried out in such a manner that erosion and water pollution are minimized.
6. Tile structure shall be removed and area stabilized when the drainage area has been properly stabilized.
7. All cut and fill slopes shall be 2:1 or flatter.
8. Outlet crest elevation shall be at least one foot below the top of the embankment.

Plate 4.25a Earth Outlet Sediment Trap
Source: NRCS

Construction Specifications

1. The area under the embankment shall be cleared, grubbed, and stripped of any vegetation and root mat. To facilitate cleanout, the pool area should be cleared.
2. Fill material for the embankment shall be free of roots or other woody vegetation, organic material, large stones, and other objectionable material. The embankment should be compacted in 8 inch (20 cm) layers by traversing with construction equipment.
3. The earthen embankment shall be seeded with temporary or permanent vegetation (see Sections 6.65 and 6.66) within 15 days of construction.
4. Construction operations shall be carried out so that erosion and water pollution are minimized.
5. The structure shall be removed and the area stabilized when the upslope drainage area has been stabilized.

Maintenance

1. Sediment shall be removed and the trap restored to its original dimensions when the sediment has accumulated to 1/2 the design volume of the trap. Sediment removed from the basin shall be deposited in a suitable area and in such a manner that it will not erode.
2. The structure should be checked regularly to insure that it is structurally sound and has not been damaged by erosion or construction equipment. The height of the outlet should be checked to ensure that its center is at least one foot (30 cm) below the top of the embankment.

CAUTION

FL ONE CALL: UTILITY LOCATOR SERVICE
3 DAYS BEFORE DIGGING CALL
TOLL FREE 1-800-432-4770
OR 811
A ONE CALL SYSTEM FOR COMMUNITY AND JOB SAFETY.

*** CAUTION ***
THE UNDERGROUND UTILITIES SHOWN HAVE BEEN LOCATED FROM FIELD SURVEY INFORMATION AND EXISTING DRAWINGS. THE SURVEYOR MAKES NO GUARANTEE THAT THE UNDERGROUND UTILITIES SHOWN COMPRISE ALL SUCH UTILITIES IN THE AREA, EITHER SHOWN OR NOT SHOWN. THE SURVEYOR FURTHER DOES NOT WARRANT THAT THE UNDERGROUND UTILITIES SHOWN ARE IN THE EXACT LOCATION INDICATED, ALTHOUGH HE DOES CERTIFY THAT THEY ARE LOCATED AS ACCURATELY AS POSSIBLE FROM INFORMATION AVAILABLE. THE SURVEYOR HAS NOT PHYSICALLY LOCATED THE UNDERGROUND UTILITIES.

Mulching

All permanent seeding must be mulched immediately upon the completion of seed application (refer to the extended discussion in **MULCHING** below).

Maintenance of New Seedings

1. ***Irrigation** – New seedings should be supplied with adequate moisture. Supply water as needed, especially late in the season, in abnormally hot or dry weather, or on adverse sites. Water application rates should be controlled to prevent runoff. Inadequate amounts of water may be more harmful than no water.*
2. ***Reseeding** – Inspect seeded areas for failure and make necessary repairs and reseedings within the same season, if possible:*
   a. If vegetative cover is inadequate to prevent rill erosion, overseed and fertilize in accordance with soil test results.
   b. If a stand has less than 40% cover, re-evaluate the choice of plant materials and quantities of lime and fertilizer. Re-establish the stand following seedbed preparation and seeding recommendations, omitting lime and fertilizer in the absence of soil test results. **NOTE** If vegetation has failed to grow, the soil must be tested to determine if acidity or nutrient imbalances are responsible.
3. ***Fertilization** – Seedlings should be fertilized 1 year after planting to ensure proper stand density:*
   a. To established all-grass stands, apply 300 pounds per acre of 15-0-15 or 15-2-15 slow release (6.7 pounds per 1,000 square feet) between August 15 and November 15 (the first fall following seeding).
   b. To legume-and-grass stands or pure legume stands, apply 150 pounds per acre of 0-20-20 (3.5 pounds per 1,000 square feet) in early May, or between August 15 and October 15.

GENERALLY, A STAND OF VEGETATION IS NOT DETERMINED TO BE FULLY ESTABLISHED UNTIL SOIL COVER HAS BEEN MAINTAINED FOR 1 FULL YEAR FROM PLANTING. DISTURBED AREAS THAT ARE TO BE STABILIZED WITH PERMANENT VEGETATION MUST BE SEEDED OR PLANTED WITHIN 15 DAYS AFTER FINAL GRADE IS REACHED, UNLESS TEMPORARY STABILIZATION IS APPLIED.

REVISIONS

ISSUED	COMMENT

COMMERCIAL SITE SOLUTIONS, INC.
SITE PLANNING • ENGINEERING
402 EAST 1ST AVENUE
EASLEY, SC 29640
864-855-5200
5032 TAMPA WEST BLVD.
TAMPA, FL 33634
813-885-2052
813-882-4372 (FAX)

PREPARED FOR:
MURPHY OIL USA, INC.
422 NORTH WASHINGTON AVENUE
EL DORADO, AR 71730
PH: 870-875-7629

EROSION CONTROL DETAILS
MURPHY OIL USA
WILDWOOD, FL
EAST COUNTY ROAD 466
WILDWOOD, FL

Date:	5/25/10
Drawn:	RSM
Checked:	MGL

C-12
Sheet

7.7 Mulching

Conditions Where Practice Applies

1. *Areas that have been permanently seeded should be mulched immediately after seeding.*
2. *Areas that cannot be seeded because of the season should be mulched to temporarily protect the soil surface. An organic mulch (not wood fiber alone) shall be used, and the area should then be seeded as soon as feasible in spring.*
3. *Mulch shall be used together with plantings of trees, shrubs, or certain ground covers that do not provide adequate soil stabilization by themselves.*
4. *Mulch shall be used in conjunction with the temporary seeding operations specified in* ***TEMPORARY SEEDING*** *(in this chapter).*
5. *Mulches used in areas of concentrated flows or frequent inundation shall be properly anchored to prevent them from floating away.*

Specifications

Types of Mulches

1. ***Organic Mulches*** *– Organic mulches may be used in any area where mulch is required, subject to the restrictions noted in* ***Table 7.1****. Select mulch material based on site requirements, the availability of materials, and the availability of labor and equipment. The table lists the most commonly used organic mulches. Other materials, such as peanut hulls and cotton burs, may also be used.*

   Mulch materials shall be spread uniformly, by hand or machine. When spreading straw by hand, divide the area to be mulched into approximately 1,000-square-foot sections and place 70 to 90 pounds (1½ to 2 bales) (30 to 40 kg) of straw in each section, to facilitate uniform distribution.
2. ***Nets, Mats, and Blankets*** *– Nets may be used alone on level areas, on slopes no steeper than 3:1, and in waterways, as specified in* ***STORMWATER CONVEYANCE CHANNEL*** *(in Chapter 6). When mulching is done in late fall or during June, July, or August, or where soil is highly erodible, net should only be used in conjunction with an organic*

   mulch such as straw. When net and organic mulch are used together, the net should be installed over the mulch, except when the mulch is wood fiber. Wood fiber may be sprayed on top of the installed net. Excelsior binders are protective mulches and may be used alone on erodible soils and during all times of year.

   *Jute net shall be heavy, uniform cloth woven of single jute yarn, which if 36 to 48 inches (90 to 120 cm) wide shall weigh an average of 1.2 pounds per linear yard (0.6 kg/m). Other products designed to control erosion shall conform to the manufacturer's specifications and should be applied in accordance with the manufacturer's instructions, provided those instructions are at least as stringent as this specification. Examples of these products include Erosionet, Holdgro, Weedchek, and Curlex. (***NOTE****: The use of trade names does not constitute a product endorsement by FDEP). In no case shall these products cover less than 30% of the soil surface.*

Table 7.1. Organic Mulch Materials and Application Rates

Mulches	Rate Per Acre	Rate Per 1,000 Square Feet	Notes
Straw	1.5 – 2 tons	70 – 90 pounds.	Free from weeds and coarse matter. Must be anchored. Spread with mulch blower or by hand.
Wood Fibers	0.5 – 1.0 tons	25 – 50 pounds	Fibers 1.5 inch minimum length. Do not use alone in winter or during hot, dry weather. Apply as slurry.
Corn Stalks	4 – 6 tons	185 – 275 pounds	Cut or shredded in 4 to 6 inch lengths. Air dried. Do not use in fine turf areas. Apply with mulch blower or by hand.
Wood Chips	4 – 6 tons	185 – 275 pounds	Free of coarse matter. Air dried. Treat with 12 pounds nitrogen per ton. Do not use in fine turf areas. Apply with mulch blower or chip handler, or by hand.
Shredded Bark Chips	50 – 70 cubic yards	1 – 2 cubic yards	Free of coarse matter. Air dried. Do not use in fine turf areas. Apply with mulch blower or chip handler, or by hand.

Source: Virginia SWCC

3. ***Chemical Mulches*** *– Chemical mulches may be used alone only in the following situations:*
   a. Where no other mulching material is available.
   b. In conjunction with temporary seeding when mulch is not required for that practice.
   c. From May 1 to June 15 and September 15 to October 15, provided that they are used on areas with slopes no steeper than 4:1 that have been roughened in accordance with **SURFACE ROUGHENING** (in this chapter).

Installation

Prior to mulching, the following activities should be carried out:

1. *As required, shape and grade the waterway, channel, slope, or other area to be protected.*
2. *Remove all rocks, clods, or debris larger than 2 inches in diameter that will prevent contact between the net and the soil surface.*
3. *Lime and fertilizer should be incorporated and the surface roughened as needed. Seed should be applied prior to mulching, except in the following cases:*
   a. Where seed is to be applied as part of a hydroseeder slurry containing wood fiber mulch.
   b. Where seed is to be applied following a straw mulch spread during the winter months.
   c. Where a hydroseeder slurry is applied over straw.

Mulch Anchoring

Straw mulch must be anchored immediately after spreading to prevent windblow. The other organic mulches listed in **Table 7.1** do not require anchoring. The following methods of anchoring straw may be used:

1. ***Mulch Anchoring Tool*** *– A tractor-drawn implement is used to punch mulch into the soil surface. This method provides maximum erosion control with straw. It is limited to use on slopes no steeper than 3:1, where equipment can operate safely. Machinery shall be operated on the contour.*
2. ***Liquid Mulch Binders*** *– The application of liquid mulch binders and tackifiers should be heaviest at the edges of areas and at the crests of ridges and banks, to prevent windblow. Binders should be applied uniformly over the rest of the area. They may be applied after mulch is spread or may be sprayed into the mulch as it is being blown onto the soil. Applying straw and binder together is the most effective method.*

   *Chemical binders such as Petroset, Terratack, Road Oyl, and Aerospray may be used as recommended by the manufacturer to anchor mulch. These are expensive and therefore are usually used in small areas or in residential areas where asphalt may be a problem. (****NOTE****: The use of trade names does not constitute a product endorsement by FDEP.)*
3. ***Mulch Nets*** *– Lightweight plastic, cotton, or paper nets may be stapled over the mulch. The nets shall be secured by stakes, staples, or pins according to the manufacturer's recommendations (see* ***Figure 7.7a*** *for details).*
4. ***Peg and Twine*** *– Because it is labor intensive, this method is feasible only in small areas where other methods cannot be used. Drive 8 to 10 inch (20 to 25 cm) wooden pegs to within 3 inches (8 cm) of the soil surface every 4 feet (1.2 m) in all directions. Stakes may be driven before or after straw is spread. Secure mulch by stretching twine between pegs in a criss-cross-within-a-square pattern. Turn twine 2 or more times around each peg.*

Laying Nets, Mats, and Blankets

Nets, mats, and blankets should be installed according to the manufacturer's instructions, provided that these are at least as stringent as the following general recommendations (see **Figure 7.7b**):

1. *Start laying the net from the top of the channel or the top of the slope and unroll downgrade.*
2. *Allow the net to lie loosely on the soil—****DO NOT STRETCH****.*
3. *To secure the net, the upslope ends should be buried in a slot or trench no less than 6 inches (15 cm) deep. Tamp earth firmly over the net. Staple the net every 12 inches (30 cm) across the top end. The edges shall be stapled every 3 feet (90 cm). Where 2 strips of net are laid side by side, the adjacent edges shall be overlapped 3 inches (8 cm) and stapled together. Staples shall be placed down the center of net strips at 3 foot (90 cm) intervals. DO NOT STRETCH the net when applying staples.*
4. *To join strips, insert a new roll of net in the trench, as with the upslope ends of the net. Overlap the end of the previous roll 18 inches (45 cm), turn under 6 inches (15 cm), and staple across the end of the roll just below the anchor slot and at the end of the turned-under net every 12 inches (30 cm) (see Figures 7.7g and 7.7h).*
5. *At the bottom of slopes, lead the net out onto a level area before anchoring. Turn the ends under 6 inches (15 cm), and staple across the ends every 12 inches (30 cm).*
6. *On highly erodible soils and on slopes steeper than 4:1, erosion check slots should be made every 15 feet (4.5 m). Insert a fold of net into a 6 inch (15 cm) trench and tamp firmly. Staple at 12 inch (30 cm) intervals across the downstream portion of the net.*
7. *After installation, stapling, and seeding, the net should be rolled to ensure firm contact between the net and soil.*

Maintenance

All mulches should be inspected periodically, particularly after rainstorms, to check for rill erosion. Where erosion is observed, additional mulch should be applied. The net should be inspected after rainstorms for dislocation or failure. If washouts or breakage occur, reinstall the net as necessary after repairing damage to the slope. Inspections should take place until the grass is firmly established. Where mulch is used in conjunction with ornamental plantings, inspect periodically throughout the year to determine if mulch is maintaining coverage of the soil surface. Repair as needed.

CHAPTER 7: BEST MANAGEMENT PRACTICES-VEGETATION FOR EROSION CONTROL

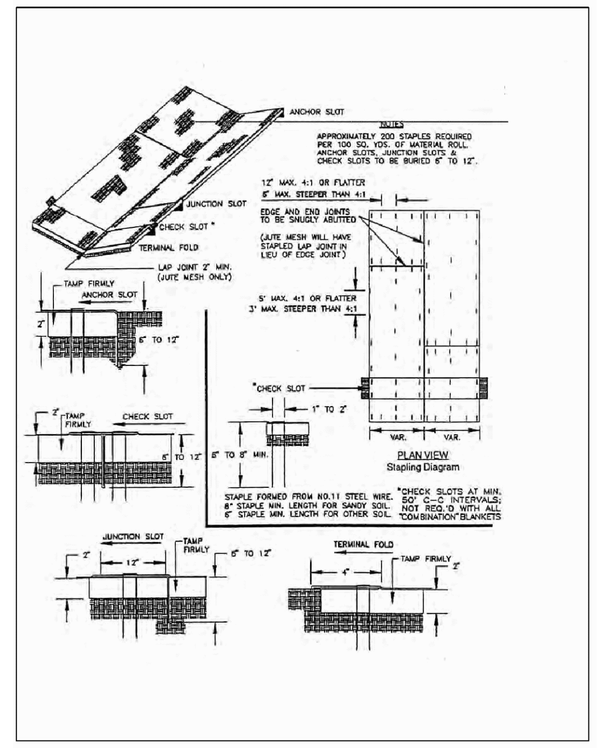

Figure 7.7b. Typical Treatment 1 – Soil Stabilization Blanket Installation Guide
Source: Virginia DOT

CHAPTER 7: BEST MANAGEMENT PRACTICES-VEGETATION FOR EROSION CONTROL

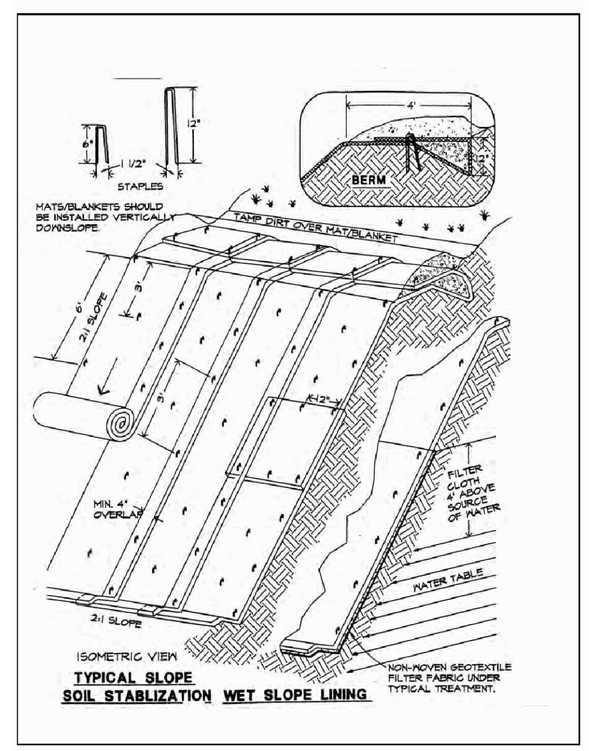

Figure 7.7c. Erosion Blankets and Turf Reinforcement Mats – Slope Installation
Source: Erosion Draw

CHAPTER 7: BEST MANAGEMENT PRACTICES-VEGETATION FOR EROSION CONTROL

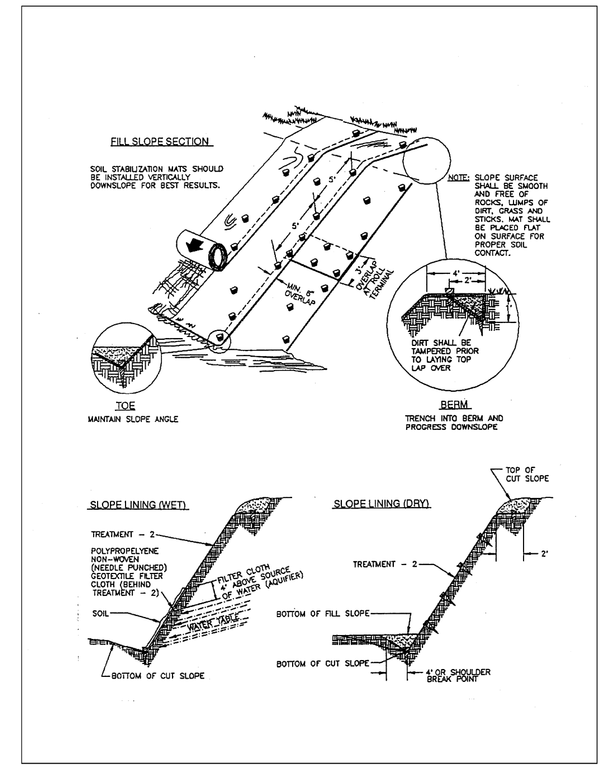

Figure 7.7d. Typical Treatment 2 – Soil Stabilization Matting Slope Installation
Source: Virginia DOT

CHAPTER 7: BEST MANAGEMENT PRACTICES-VEGETATION FOR EROSION CONTROL

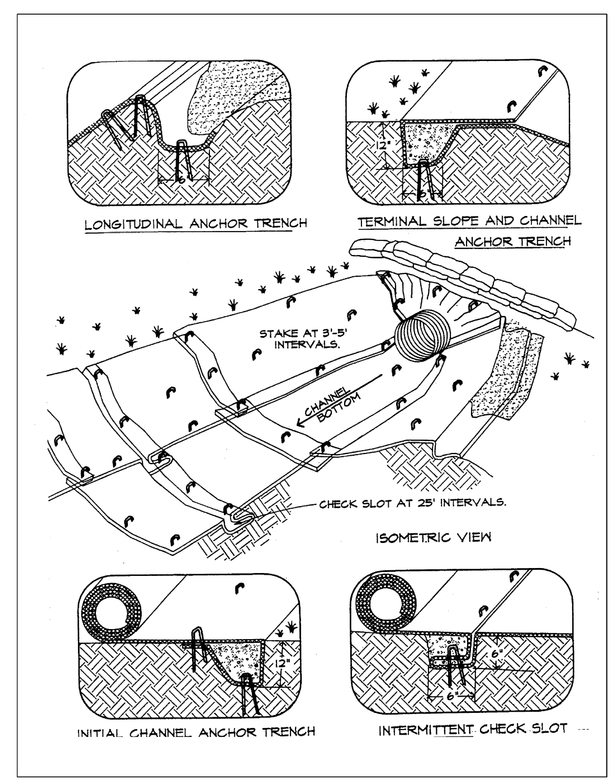

Figure 7.7e. Erosion Blankets and Turf Reinforcement Mats – Channel Installation
Source: Erosion Draw

CHAPTER 7: BEST MANAGEMENT PRACTICES-VEGETATION FOR EROSION CONTROL

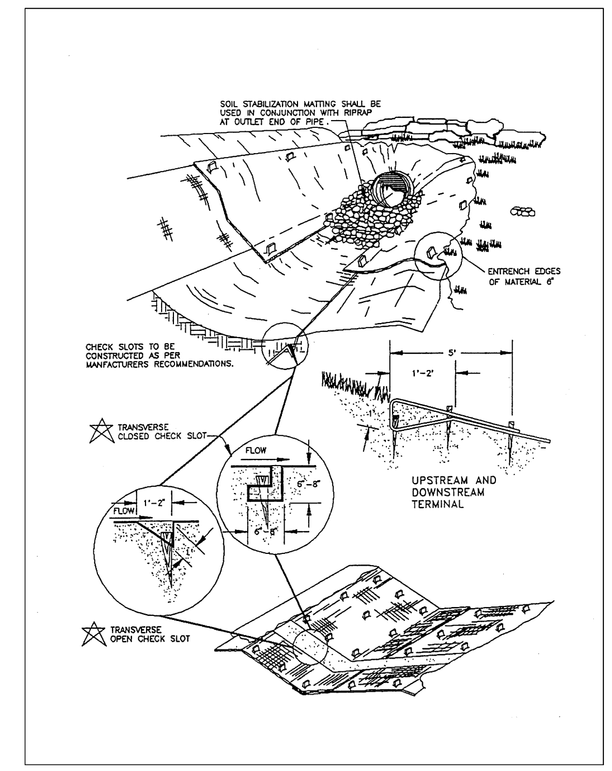

Figure 7.7f. Typical Treatment 2 – Soil Stabilization Matting Installation
Source: Virginia DOT

CHAPTER 7: BEST MANAGEMENT PRACTICES-VEGETATION FOR EROSION CONTROL

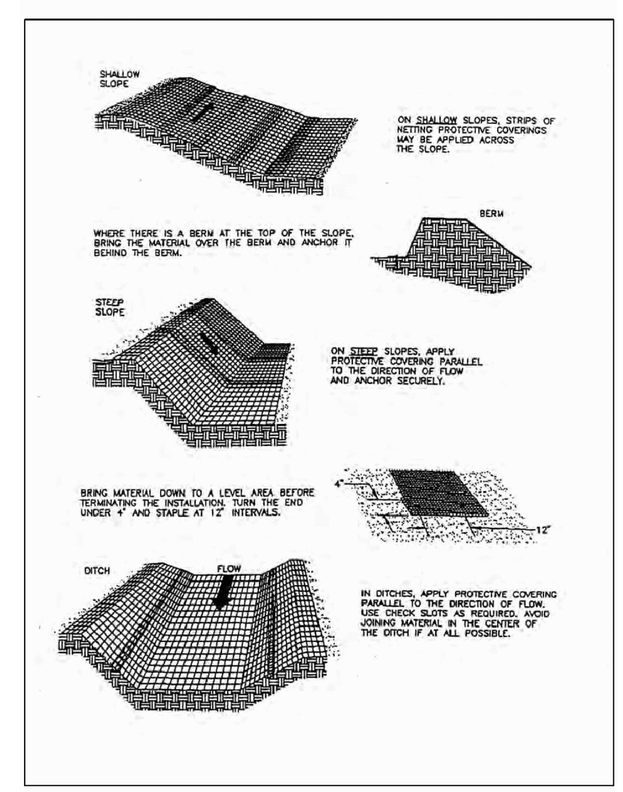

Figure 7.7a. Typical Orientation of Treatment 1 – Soil Stabilization Blanket
Source: Adapted from Ludlow Products Brochure

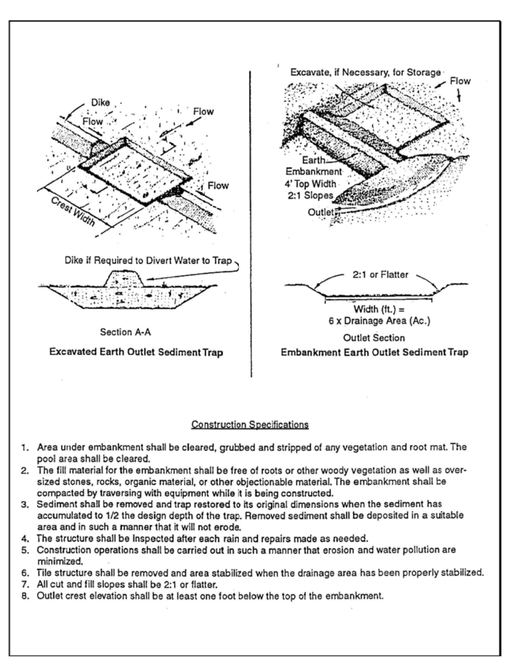

Construction Specifications

1. Area under embankment shall be cleared, grubbed and stripped of any vegetation and root mat. The pool area shall be cleared.
2. The fill material for the embankment shall be free of roots or other woody vegetation as well as over-sized stones, rocks, organic material, or other objectionable material. The embankment shall be compacted by traversing with equipment while it is being constructed.
3. Sediment shall be removed and trap restored to its original dimensions when the sediment has accumulated to 1/2 the design depth of the trap. Removed sediment shall be deposited in a suitable area and in such a manner that it will not erode.
4. The structure shall be inspected after each rain and repairs made as needed.
5. Construction operations shall be carried out in such a manner that erosion and water pollution are minimized.
6. Tile structure shall be removed and area stabilized when the drainage area has been properly stabilized.
7. All cut and fill slopes shall be 2:1 or flatter.
8. Outlet crest elevation shall be at least one foot below the top of the embankment.

Outlet

The outlets shall be designed, constructed and maintained so that sediment does not leave the trap and that erosion of the outlet does not occur. A trap may have several different outlets with each outlet conveying part of the flow based on the criteria below. The combined outlet capacity shall be sufficient for the drainage area. For example, a 12 foot (3.6 m) earth outlet, adequate for 2 acres (0.8 ha), and a 12 inch (30 cm) pipe outlet, adequate for 1 acre (0.4 ha), could be used for a three acre (1.2 ha) drainage area.

There are four types of outlets for sediment traps. Each sediment trap is named according to the type of outlet that it has. Each type has different design criteria and will be discussed separately.

1. An Earth Outlet Sediment Trap consists of a basin formed by excavation and/or an embankment. The trap has a discharge point over or cut into natural ground. The outlet width (feet) shall be equal to 6 times the drainage area (acres). If an embankment is used the outlet crest shall be at least one foot (30 cm) below the top of the embankment. The outlet shall be free of any restriction to flow. The earthen embankment shall be seeded with temporary or permanent vegetation (see Sections 6.65 and 6.66) within 15 days of construction. (See Plate 4.25a)
2. A Pipe Outlet Sediment Trap consists of a basin formed by an embankment, or an excavation and an embankment. The outlet for the trap is though a perforated riser and a pipe through the embankment. The outlet pipe and riser shall be made of corrugated metal. The riser diameter shall be of the same or larger diameter than the pipe. The top of the embankment shall be at least 1.5 feet (45 cm) above the crest of the riser. At least the top 2/3 of the riser shall be perforated with 1/2 inch (13 mm) diameter holes spaced 8 inches (20 cm) vertically and 10-12 inches (25 - 30 cm) horizontally. All pipe connections shall be watertight (See Plate 4.25b). Select pipe diameter from the following table:

Minimum Pipe Diameter in inches (cm)		Maximum Drainage Area in acres (ha)	
12	(30 cm)	1	(0.4 ha)
18	(45 cm)	2	(0.8 ha)
21	(53 cm)	3	(1.2 ha)
24	(60 cm)	4	(1.6 ha)
30	(75 cm)	5	(2.0 ha)

3. A Stone Outlet Sediment Trap consists of a basin formed by an embankment or excavation and an embankment. The outlet for the sediment trap shall consist of a crushed stone section of the embankment located at the low point in the basin. The minimum length of the outlet shall be 6 feet times the acreage of the drainage area (4.5 m times hectares). The crest of the outlet must be at least 1foot (30 cm) below the top of the embankment, to insure that the flow will travel over the stone and not the embankment. The outlet shall be constructed of FDOT No. 1 size crushed stone. (See Plate 4.25c) A very temporary alternate trap can be constructed from straw bales with a stone outlet. (See Plate 4.25d) Straw bales shall be installed per Section 4.05 STRAW BALE BARRIER (ES BMP 1.05).
4. A Storm Inlet Sediment Trap consists of a basin formed by excavation or natural ground that discharges through an opening in a storm drain inlet structure. This opening can either be the inlet opening or a temporary opening made by omitting bricks or blocks in the inlet. The trap shall be between 1' and 2' (30 - 60 cm) deep measured from the low point of the inlet. A yard drain inlet or an inlet in the median strip of a dual highway would use the inlet opening for an outlet. (See Plate 4.25e) A curb inlet would require a temporary opening. (See Plate 4.25f) The trap should be out of the roadway to avoid interference with construction. Placing the trap on the opposite side of the opening and diverting water from the roadway to the trap is one means of accomplishing this.
5. Other applications At times a small trap may be constructed in a drainage channel using the culvert for a road crossing. Straw bales or gravel filled bags may be used provided that there are no gaps in the installation. (See Plate 4.25g) In larger traps baffles may be required to insure adequate flow length and prevent short-circuiting. (See Plate 4.25h)

Construction Specifications

1. The area under the embankment shall be cleared, grubbed, and stripped of any vegetation and root mat. To facilitate cleanout, the pool area should be cleared.
2. Fill material for the embankment shall be free of roots or other woody vegetation, organic material, large stones, and other objectionable material. The embankment should be compacted in 8 inch (20 cm) layers by traversing with construction equipment.
3. The earthen embankment shall be seeded with temporary or permanent vegetation (see Sections 6.65 and 6.66) within 15 days of construction.
4. Construction operations shall be carried out so that erosion and water pollution are minimized.
5. The structure shall be removed and the area stabilized when the upslope drainage area has been stabilized.

Maintenance

1. Sediment shall be removed and the trap restored to its original dimensions when the sediment has accumulated to 1/2 the design volume of the trap. Sediment removed from the basin shall be deposited in a suitable area and in such a manner that it will not erode.
2. The structure should be checked regularly to insure that it is structurally sound and has not been damaged by erosion or construction equipment. The height of the outlet should be checked to ensure that its center is at least one foot (30 cm) below the top of the embankment.

CHAPTER 7: BEST MANAGEMENT PRACTICES-VEGETATION FOR EROSION CONTROL

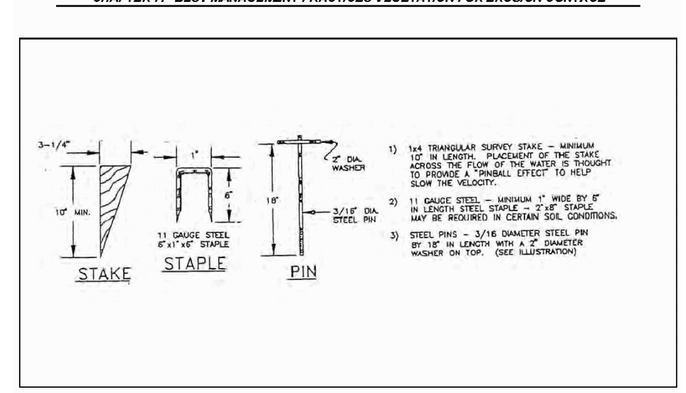

Figure 7.7g. Stakes, Staples, and Pins for the Installation of Soil Stabilization Matting
Source: Product Literature from Greenstreak, Inc.

CHAPTER 7: BEST MANAGEMENT PRACTICES-VEGETATION FOR EROSION CONTROL

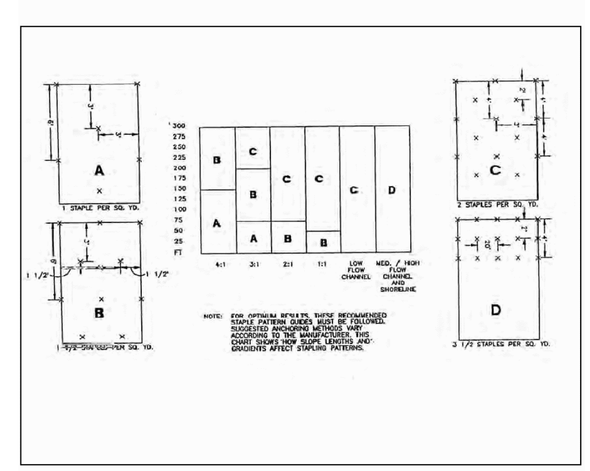

Figure 7.7h. General Staple Pattern Guide and Recommendation for Treatment 2 – Soil Stabilization Matting
Source: Product Literature from North American Green

REVISIONS

ISSUED	COMMENT

COMMERCIAL SITE SOLUTIONS, INC.
SITE PLANNING • ENGINEERING
5032 TAMPA WEST BLVD.
TAMPA, FL 33634
813-885-2032
813-882-4372 (FAX)
402 EAST 1ST AVENUE
EASLEY, SC 29640
864-855-5200

PREPARED FOR:
MURPHY OIL USA, INC.
422 NORTH WASHINGTON AVENUE
EL DORADO, AR 71730
PH: 870-875-7629

EROSION CONTROL DETAILS

MURPHY OIL USA
WILDWOOD, FL
EAST COUNTY ROAD 466
WILDWOOD, FL

Date: 5/25/10
Drawn: RSM
Checked: MGL

C-13
Sheet

CAUTION

FL ONE CALL: UTILITY LOCATOR SERVICE
3 DAYS BEFORE DIGGING CALL TOLL FREE 1-800-432-4770 OR 811
A ONE CALL SYSTEM FOR COMMUNITY AND JOB SAFETY.

*** CAUTION ***

THE UNDERGROUND UTILITIES SHOWN HAVE BEEN LOCATED FROM FIELD SURVEY INFORMATION AND EXISTING DRAWINGS. THE SURVEYOR MAKES NO CLAIM THAT THE UTILITIES SHOWN ARE THE ONLY UTILITIES THAT MAY ALSO EXIST IN THE AREA, EITHER IN SERVICE OR ABANDONED. THE SURVEYOR FURTHER DOES NOT WARRANT THAT THE UNDERGROUND UTILITIES SHOWN ARE IN THE EXACT LOCATION INDICATED, ALTHOUGH HE DOES CERTIFY THAT THEY ARE LOCATED AS ACCURATELY AS THE EVIDENCE AND INFORMATION AVAILABLE. THE SURVEYOR HAS NOT PHYSICALLY LOCATED THE UNDERGROUND UTILITIES.

NOTE: ALL PULL BOXES LOCATED IN PAVED AREAS SUBJECT TO TRUCK TRAFFIC SHALL BE "H-20" LOAD RATED. THE TYPICAL PULL BOX SIZE SHALL BE 18"x24"x24" OR DEEPER WHEN THE CONDUIT ALIGNMENT IS AFFECTED BY OTHER UTILITIES. ACCEPTABLE FOR MOST LOCATIONS IS A "QUAZITE" PG1730BA24 BOX WITH PG1730HA00 LID OR APPROVED EQUAL. THE PULL BOX SHALL BE INSTALLED PER MANUFACTURER'S SPECIFICATION WITH A CONCRETE COLLAR AND A MINIMUM OF 8" OF GRAVEL COMPACTED PER PROJECT SPECIFICATIONS. IF USING A PULL BOX TO CHANGE DIRECTION, THE MINIMUM BOX SIZE SHALL BE 48"x48"x24" PRECAST CONCRETE WITH SEPARATE MANHOLE LID AND COLLAR.

NOTE: ANY UTILITY WORK THAT REQUIRES WORKING WITHIN THE DRIP LINE OF ANY TREE THAT IS TO REMAIN SHALL BE DONE BY ROOT PRUNING AND HAND INSTALLTION. ALL ROOT PRUNING TO BE PERFORMED BY A CERTIFIED ARBORIST.

ALL MATERIALS, EQUIPMENT, LABOR, AND WORKMANSHIP IS TO BE IN ACCORDANCE WITH AND SUBJECT TO THE CITY OF WILDWOOD ORDINANCES, POLICIES, AND STANDARD SPECIFICATIONS, AND THE FLORIDA ADMINISTRATIVE CODE FOR WASTEWATER COLLECTION AND WATER DISTRIBUTION SYSTEMS. IN THE EVENT OF CONFLICT BETWEEN THE CITY OF WILDWOOD ORDINANCES AND STANDARD SPECIFICATIONS AND THE FLORIDA ADIMINISTRATIVE CODE, THE MORE RESTRICTIVE REQUIREMENTS SHALL APPLY.

UTILITY KEY

1. 4" PVC - SANITARY SEWER TIE IN - REFER TO ARCH. PLANS
2. 1" DOMESTIC WATER TIE IN - REFER TO ARCH. PLANS
3. 1" IRRIGATION WATER LINE W/ 1" METER AND BACKFLOW REDUCED PRESSURE BACKFLOW PREVENTER.
4. SECONDARY ELEC. FEED AND TELEPHONE LINE(S). REFER TO ARCH. PLAN.
5. ELEC. FEED FROM MURPHY EXPRESS ELEC. PANEL TO MONUMENT SIGN AND AIR/VAC UNIT.
6. AIR/VACUUM UNIT. RE: ARCH PLANS FOR CONDUIT SIZE AND DETAIL
7. PUBLIC TELEPHONE - SEE ARCH PLANS FOR CONDUIT SIZE.

SERVICE LINE ENTRY AND EXIT POINTS ARE SHOWN FOR REFERENCE ONLY. CONTRACTOR SHALL REFER PLANS BY GALLOWAY AND FREY MOSS FOR EXACT LOCATIONS AND DEPTHS

LEGEND

EXISTING	PROPOSED	DESCRIPTION
		WATER LINE
		FIRE HYDRANT
	UE/UT	UNDERGROUND ELEC./TELE.
		OVERHEAD ELEC./TELE.
18"RCP		STORM DRAIN
		GAS LINE
MH		SANITARY SEWER MANHOLE
	CO	CLEAN OUT
8"PVC		SANITARY SEWER LINE
		SITE LIGHTING

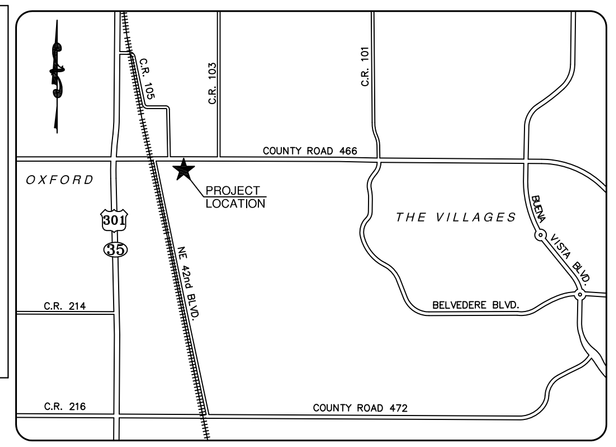

VICINITY MAP
(NOT TO SCALE)

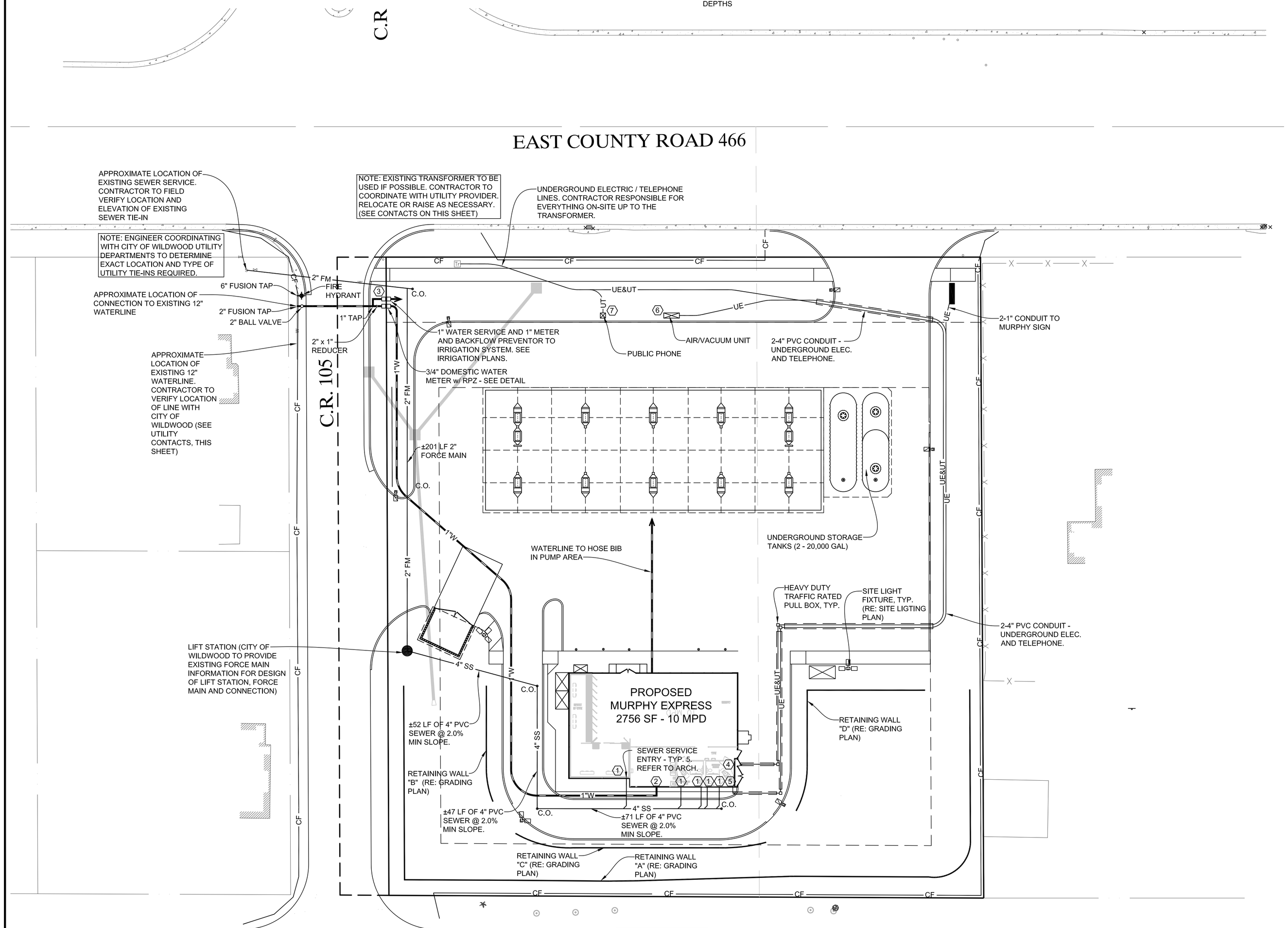

UTILITY NOTES

1. ALL SEWER CONSTRUCTION SHALL BE IN ACCORDANCE WITH THE STANDARDS AND SPECIFICATIONS OF THE STATE OF FLORIDA AND THE CITY OF WILDWOOD.

2. WATER LINES SHALL BE INSTALLED WITH A MINIMUM OF 36" OF COVER UNLESS OTHERWISE NOTED. ALL WATER CONSTRUCTION SHALL BE IN ACCORDANCE WITH THE STANDARDS AND SPECIFICATIONS OF THE CITY OF WILDWOOD.

3. VALVES SHALL BE RESILIENT SEAT GATE VALVES, DIRECT BURY WITH A VALVE BOX (AWWA C509).

4. ALL WATER MAINS 3" AND GREATER IN DIAMETER SHALL BE CLASS 350 DIP AND ALL SERVICE LINES LESS THAN 3" IN DIAMETER SHALL BE TYPE K COPPER TUBING.

5. SEWER LINES SHALL BE POLYVINYL CHLORIDE (PVC) SDR 35 PER ASTM D-3034.

6. SEWER CLEANOUTS SHALL BE IN ACCORDANCE WITH THE CITY OF WILDWOOD DETAILS AND SPECIFICATIONS.

7. THE CONTRACTOR SHALL REFER TO THE ARCHITECTURAL PLANS FOR EXACT UTILITY EXIT POINTS, EXIT PORCHES, ETC.

8. INFORMATION CONCERNING UNDERGROUND UTILITIES WAS OBTAINED FROM AVAILABLE RECORDS AND FIELD LOCATIONS WHEN POSSIBLE, BUT THE CONTRACTOR MUST DETERMINE THE EXACT LOCATION BY DIGGING TEST PITS BY HAND AT ALL UTILITY CROSSINGS WELL IN ADVANCE OF TRENCHING. IF CLEARANCES ARE LESS THAN SPECIFIED ON THE PLAN OR 12", WHICHEVER IS LESS, CONTACT THE DESIGN ENGINEER PRIOR TO PROCEEDING WITH CONSTRUCTION.

11. ALL NECESSARY INSPECTIONS AND/OR CERTIFICATIONS REQUIRED BY CODES AND/OR UTILITY SERVICE COMPANIES SHALL BE PERFORMED PRIOR TO ANNOUNCED BUILDING POSSESSION AND/OR FINAL CONNECTION OF SERVICES.

12. A MINIMUM OF 10 FEET HORIZONTAL SEPARATION MUST BE MAINTAINED BETWEEN WATER AND SEWER LINES. THE VERTICAL SEPERATION IS TO BE A MINIMUM OF 18".

13. REFER TO THE ARCHITECTURAL PLANS FOR SITE LIGHTING ELECTRICAL DESIGN AND LAYOUT.

14. ALL SITEWORK SHALL MEET OR EXCEED THE CITY OF WILDWOOD STANDARDS AND THE SITEWORK SPECIFICATIONS.

15. CONTRACTOR TO PROVIDE ALL TRENCHING, BACKFILLING, & INSTALL ALL ELECTRICAL CONDUITS TO UTILITY COMPANY SPECIFICATIONS.

16. LOCATION OF SITE UTILITIES SHALL BE VERIFIED BY GENERAL CONTRACTOR & THE PROPER UTILITY COMPANY PROVIDING SERVICE.

17. GENERAL CONTRACTOR SHALL PROVIDE 2' x 2' x 6" THICK CONCRETE APRON AT ALL CLEANOUTS OUTSIDE OF BUILDING.

18. GENERAL CONTRACTOR WILL BE RESPONSIBLE FOR ALL TAP AND TIE ON FEES REQUIRED, AS WELL AS COST OF UNDERGROUND SERVICE CONNECTIONS TO THE BUILDING.

19. ELECTRICAL SERVICE TO POLE MOUNTED TRANSFORMER SHALL BE RUN UNDERGROUND, FROM ROAD RIGHT-OF-WAY TO BUILDING. ASSOCIATED MATERIALS AND COST BY GENERAL CONTRACTOR.

20. ALL ELECTRIC AND TELEPHONE EXTENSIONS INCLUDING SERVICE LINE SHALL BE CONSTRUCTED TO THE APPROPRIATE UTILITY COMPANY SPECIFICATIONS. ALL UTILITY DISCONNECTIONS SHALL BE COORDINATED WITH THE DESIGNATED UTILITY COMPANIES.

21. THRUST BLOCKS SHALL BE PROVIDED AT ALL BENDS, TEES, AND FIRE HYDRANTS.

22. DIMENSIONS SHOWN ARE TO CENTERLINE OF PIPE OR FITTING.

23. ALL TRENCHING, PIPE LAYING, AND BACKFILLING SHALL BE IN ACCORDANCE WITH FEDERAL OSHA REGULATIONS.

24. GENERAL CONTRACTOR SHALL HAVE APPROVAL OF ALL GOVERNING AGENCIES HAVING JURISDICTION OVER THIS SYSTEM PRIOR TO INSTALLATION.

UTILITY CONTACTS

WATER:	POWER:
CITY OF WILDWOOD WATER DEPARTMENT 100 NORTH MAIN STREET WILDWOOD, FL 34785 CONTACT: RON ALLEN PHONE: 352-330-1346 FAX: 352-330-1338	SUMTER ELECTRIC COOPERATIVE 330 SOUTH US HIGHWAY 301 SUMTER, FL 33585 CONTACT: LORI COOK PHONE: 352-793-3801 FAX: 352-793-1604
SEWER:	**TELEPHONE:**
CITY OF WILDWOOD WASTEWATER 100 NORTH MAIN STREET WILDWOOD, FL 34785 CONTACT: PETE BENNETT PHONE: 352-330-1349 FAX: 352-330-1350	CENTURY LINK 319 SOUTHEAST BROADWAY STREET OCALA, FL 34474 CONTACT: GREG SCHMID PHONE: 352-401-6555 FAX: 352-368-8889

N

0 20 40 60

SCALE: 1" = 20'

REVISIONS

ISSUED	COMMENT

COMMERCIAL SITE SOLUTIONS, INC.
SITE PLANNING • ENGINEERING
402 EAST 1ST AVENUE
EASLEY, SC 29640
864-855-5200
5032 TAMPA WEST BLVD.
TAMPA, FL 33634
813-885-7202
813-882-4737 (FAX)

PREPARED FOR:
MURPHY OIL USA, INC.
422 NORTH WASHINGTON AVENUE
EL DORADO, AR 71730
PH: 870-875-7629

UTILITY PLAN

MURPHY OIL USA
WILDWOOD, FL
EAST COUNTY ROAD 466
WILDWOOD, FL

Date:	5/25/10
Drawn:	MGL
Checked:	—

C-14
Sheet

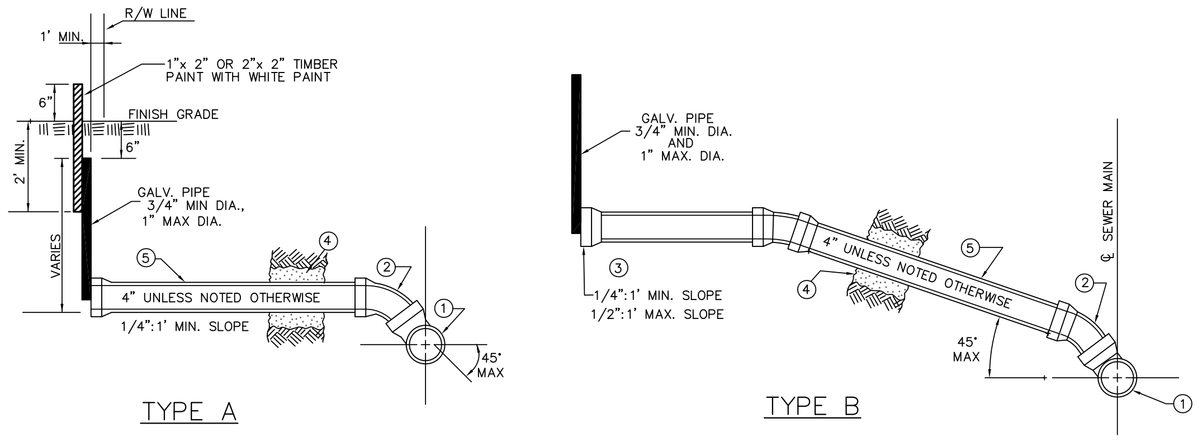

TYPE A

TYPE B

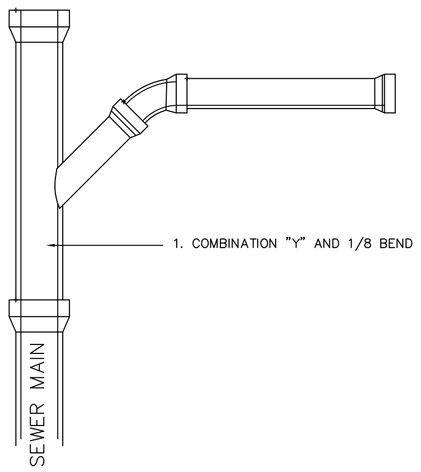

PLAN VIEW

NOTES:
1. COMBINATION "Y" AND 1/8 BEND OR "Y" – ROTATE 45 DEGREES FROM HORIZONTAL UNLESS OTHERWISE SPECIFIED.
2. 6" – 1/8 BEND OR 1/16 BEND AS NEEDED.
3. CAP UNLESS JOINING EXIST. HOUSE CONNECTION
4. BED PIPE WITH 4" PEA GRAVEL AND BACKFILL WITH PEA GRAVEL TO 4" ABOVE PIPE.
5. SEWER PIPE SHALL BE PVC OR GRAY CAST IRON WITH MECHANICAL FILLINGS. CONFORMING TO ASTM C13 AND C200 FOR EXTRA STRENGTH WITH JOINTS MEETING ASTM C425, OR MATERIAL USED FOR SERVICES SHALL BE OF THE SAME MATERIAL AS THE MAIN COLLECTOR LINE.
6. 6" LATERAL SHALL BE USED FOR LARGE BUILDINGS.
7. STRAIGHT TEES WILL NOT BE ACCEPTED.

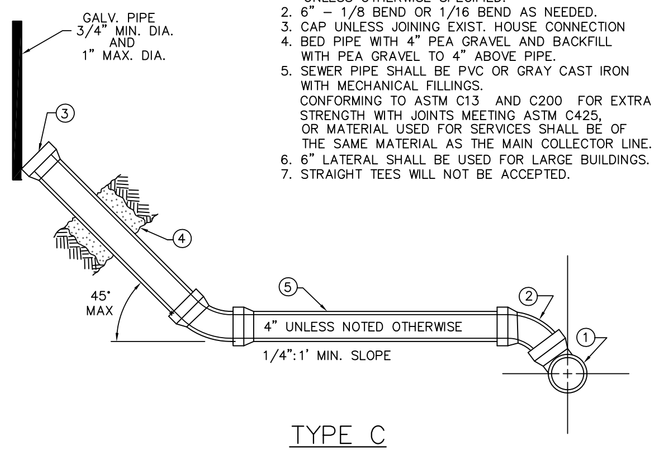

TYPE C

SEWER TAP CONNECTION

(N.T.S.)

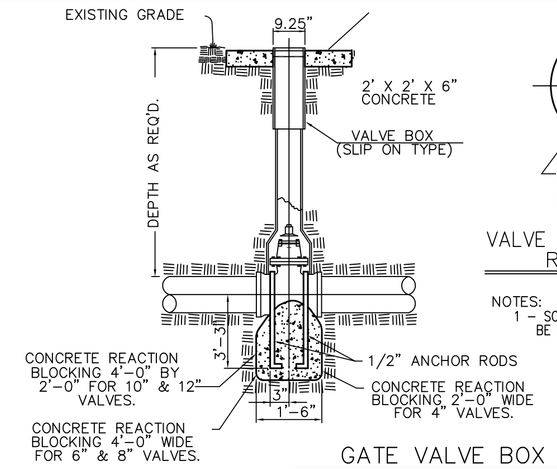

GATE VALVE BOX DETAIL

N.T.S.

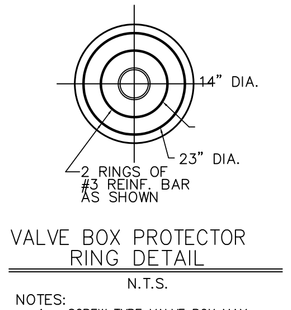

VALVE BOX PROTECTOR RING DETAIL

N.T.S.

NOTES:
1 – SCREW TYPE VALVE BOX MAY BE USED AS ALTERNATIVE.

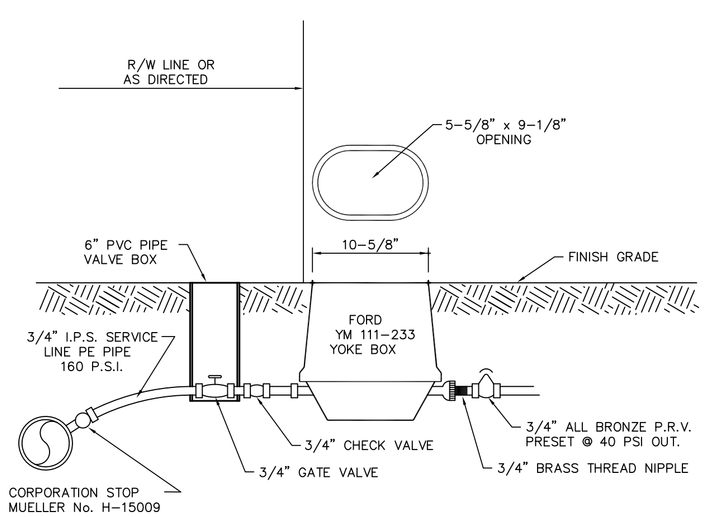

TYPICAL 3/4" WATER METER INSTALLATION

(N.T.S.)

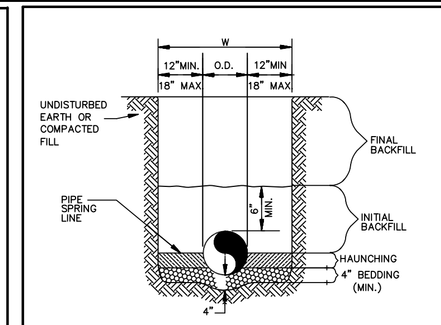

STORM DRAIN

N.T.S.

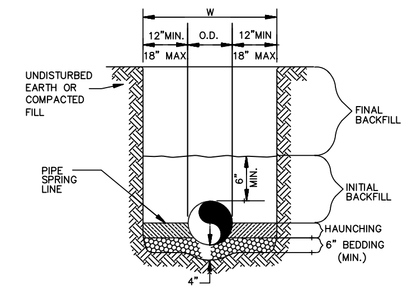

SANITARY SEWER

N.T.S.

GENERAL NOTES

1. BEDDING SHALL BE WORKED BY HAND AND SHALL BE A BLEND OF ANGULAR MATERIAL THAT CONFORMS TO THE FOLLOWING SIEVE ANALYSIS: 100% PASSING 1–1/2 INCHES, 0–10% PASSING NO. 4 AND 0–5% PASSING NO. 200. IF GROUNDWATER IS ANTICIPATED, THEN BEDDING SHALL CONFORM TO THE FOLLOWING SIEVE ANALYSIS: 100% PASSING 1–1/2 INCHES, 0–50% PASSING NO.4, AND 0–5% PASSING NO. 200 COMPACTED TO 95% STANDARD PROCTOR.

2. HAUNCHING AND INTIAL BACKFILL SHALL BE WORKED AROUND THE PIPE BY HAND TO ELIMINATE VOIDS AND SHALL BE THE SAME AS THE BEDDING MATERIAL OR COARSE–GRAINED SOILS CONFORMING TO ASTM D2487 GROUP SYMBOL, GW, GP, SW, AND SP COMPACTED TO 95% PROCTOR.

3. FINAL BACKFILL SHALL BE ANGULAR MATERIAL THAT CORESPONDS TO THE FOLLOWING SIEVE ANALYSIS: 100% PASSING 1–1/2 INCHES, 0–10% PASSING NO. 4, AND 0–5% PASSING NO. 200, OR 100% PASSING 1–1/2 INCHES, 0–50% PASSING NO. 4, AND 0–5% PASSING NO. 200, OR COARSE GRAIN SOILS WITH OR WITHOUT FINES THAT CONFORM TO ASTM D2487 SYMBOL GW, GP, SW, SP, GM, GC, SM, AND SC. MATERIAL TO BE COMPACTED AS NOTED IN NOTE 2.

4. ALL MATERIALS ARE CLASSIFIED IN ACCORDANCE WITH ASTM D 2321–89.

5. ALL MATERIALS SHALL BE INSTALLED IN MAXIMUM 8" LOOSE LIFTS IN ACCORDANCE WITH ASTM D 698. MATERIALS THAT CORRESPOND TO SYMBOL GM, GC, SM, AND SC SHALL BE COMPACTED NEAR OPTIMUM MOISTURE CONTENT.

6. FILL SALVAGED FROM EXCAVATION SHALL BE FREE OF DEBRIS, ORGANICS AND ROCKS LARGER THAN 3".

7. ALL TRENCH EXCAVATIONS SHALL BE SLOPED, SHORED, SHEETED, BRACED, OR OTHERWISE SUPPORTED IN COMPLIANCE WITH OSHA REGULATIONS AND LOCAL ORDINANCES. (SEE SPECIFICATIONS)

UTILITY TRENCH AND BEDDING

N.T.S.

NOTE: ALL MATERIALS ARE CLASSIFIED IN ACCORDANCE WITH ASTM D 2321–89.

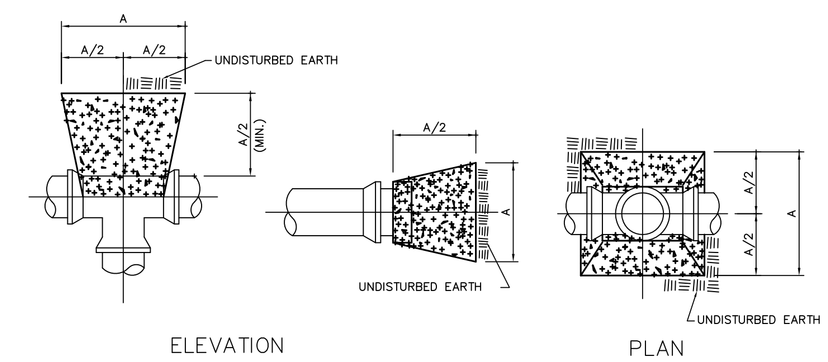

ELEVATION

PLAN

NOTE:
THRUST BLOCKING SHALL BE 3,000 LB. CONCRETE, PROPERLY PLACED, TO TRANSMIT FORCES TO UNDISTURBED EARTH AS INDICATED.

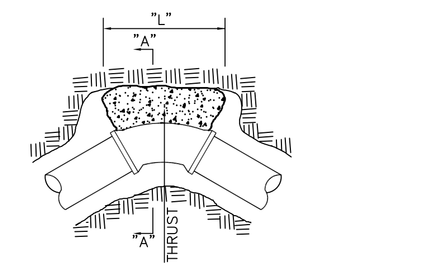

PLAN

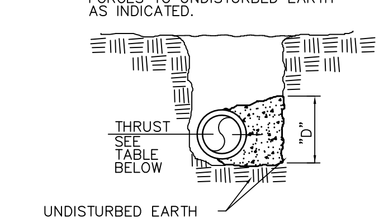

ELEVATION

THRUST TABULATION (KIP)					
BEND PIPE DIA.		BEND 22–1/2°	BEND 45°	BEND 90°	PLUG TEE OR 60° BEND
2"–4"	0.7	1.3	2.5	4.7	3.3
6"	1.5	2.9	5.7	10.6	7.5
8"	2.9	5.0	9.8	18.2	12.9
10"	3.8	7.5	14.8	27.4	19.3
12"	5.4	10.7	20.9	38.7	27.4
14"	7.4	14.6	28.6	52.8	37.4
16"	9.3	18.5	36.4	67.2	47.5

END AREA SQ. FT. = $\frac{\text{THRUST X 1000}}{\text{BEARING X 2000}}$

SOIL	MIN. SAFE BEARING TONS/FT.^{2}
ROCK, HARD THICK LAYERS	200
ROCK, EQUAL GOOD MASONRY	25
ROCK, EQUAL BEST BRICK	15
ROCK, EQUAL POOR BRICK	5
CLAY, ALWAYS DRY	4
CLAY, FAIRLY DRY	2
CLAY, SOFT	1
GRAVEL, COARSE SAND, FIRM	8
SAND, COMPACT, FIRM	4
SAND, CLEAN, DRY	2
QUICKSAND, ALLUVIAL SOIL	1/2

THRUST BLOCK DETAIL

(N.T.S.)

NOTE: NO CONCRETE SHALL COVER OR COME INTO CONTACT W/ ANY JOINTS, OR OPERATING VALVE.

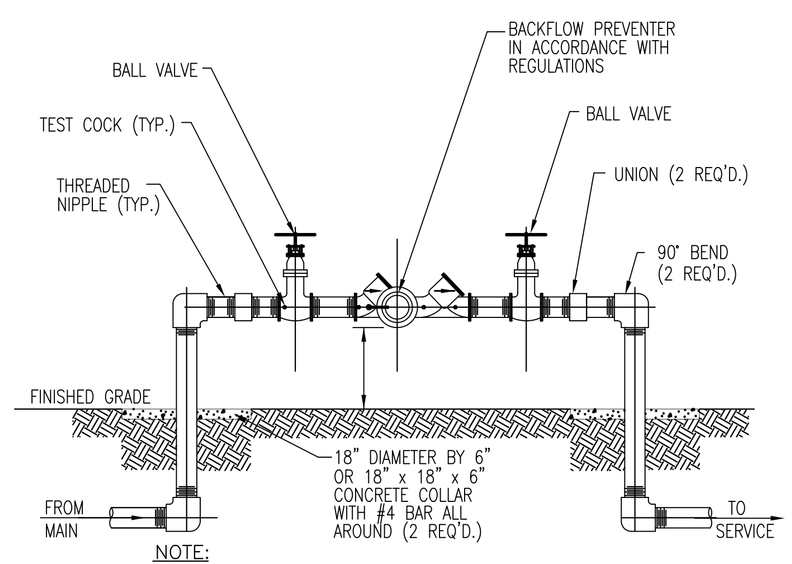

NOTE:
1. ALL PIPE VALVES AND FITTINGS 2" AND SMALLER SHALL BE THREADED BRASS.
2. ACCEPTABLE MODELS:
   - WATTS 909
   - FEBCO 825Y (D)
   - WILKINS 975XL
   - CONBRACO 400
   - OR APPROVED EQUAL
3. THIS DETAIL IS REPRESENTATIVE OF ACCEPTABLE REDUCED PRESSURE BACKFLOW DEVICES FOR SERVICES 2" IN DIAMETER OR SMALLER.

REDUCED PRESSURE ZONE BACKFLOW PREVENTER

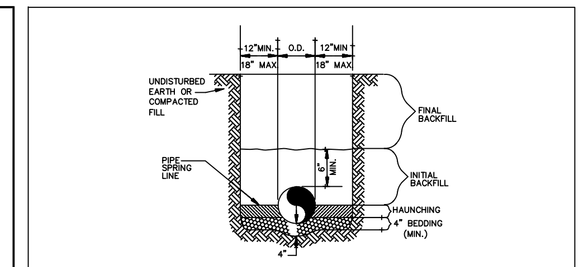

GENERAL NOTES

1. BEDDING SHALL BE CLASS I–A WORKED BY HAND. IF GROUNDWATER IS ANTICIPATED, THEN BEDDING SHALL BE CLASS I–B COMPACTED TO 85% STANDARD PROCTOR.
2. HAUNCHING SHALL BE WORKED AROUND THE PIPE BY HAND TO ELIMINATE VOIDS AND SHALL BE CLASS I–A OR CLASS I–B OR CLASS II COMPACTED TO 85% PROCTOR.
3. INITIAL BACKFILL SHALL BE CLASS I–A WORKED BY HAND, OR CLASS I–B OR CLASS II COMPACTED TO 85% STANDARD PROCTOR.
4. INITIAL BACKFILL NOT UNDER PAVED AREAS CAN BE CLASS III COMPACTED TO 90% STANDARD PROCTOR.
5. FINAL BACKFILL SHALL BE CLASS I, II, OR III COMPACTED AS NOTED IN NOTES 3. AND 4.
6. FINAL BACKFILL NOT UNDER PAVED AREAS CAN BE CLASS IV–A COMPACTED TO 95% STANDARD PROCTOR.
7. ALL MATERIALS ARE CLASSIFIED IN ACCORDANCE WITH ASTM D 2321–89.
8. ALL MATERIALS SHALL BE INSTALLED IN MAXIMUM 8" LOOSE LIFTS IN ACCORDANCE WITH ASTM D 698. CLASS III AND IV–A MATERIALS SHALL BE COMPACTED NEAR OPTIMUM MOISTURE CONTENT.
9. FILL SALVAGED FROM EXCAVATION SHALL BE FREE OF DEBRIS, ORGANICS AND ROCKS LARGER THAN 3".
10. ALL TRENCH EXCAVATIONS SHALL BE SLOPED, SHORED, SHEETED, BRACED, OR OTHERWISE SUPPORTED IN COMPLIANCE WITH OSHA REGULATIONS AND LOCAL ORDINANCES.

WATER LINE TRENCH AND BEDDING

N.T.S.

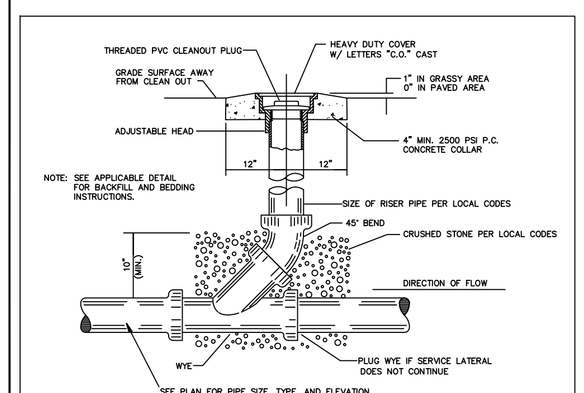

SANITARY SEWER CLEAN-OUT

N.T.S.

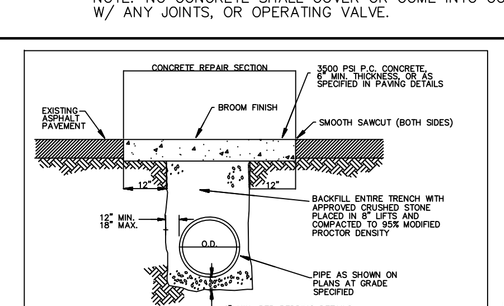

ASPHALT STREET OR DRIVE CUT/REPAIR

N.T.S.

CAUTION

FL ONE CALL: UTILITY LOCATOR SERVICE

2 DAYS BEFORE YOU DIG CALL TOLL FREE 1-800-432-4770

*** CAUTION ***

THE UNDERGROUND UTILITIES SHOWN HAVE BEEN LOCATED FROM FIELD SURVEY INFORMATION AND EXISTING DRAWINGS. THE SURVEYOR MAKES NO GUARANTEE THAT THE UNDERGROUND UTILITIES SHOWN COMPRISE ALL SUCH UTILITIES IN THE AREA, EITHER IN SERVICE OR ABANDONED. THE SURVEYOR FURTHER DOES NOT WARRANT THAT THE UNDERGROUND UTILITIES SHOWN ARE IN THE EXACT LOCATION INDICATED ALTHOUGH IT IS CERTAIN THAT THEY ARE LOCATED AS ACCURATELY AS POSSIBLE FROM INFORMATION AVAILABLE. THE SURVEYOR HAS NOT PHYSICALLY LOCATED THE UNDERGROUND UTILITIES.

REVISIONS

ISSUED	COMMENT

COMMERCIAL SITE SOLUTIONS, INC.
SITE PLANNING • ENGINEERING
402 EAST 1ST AVENUE
EASLEY, SC 29640
864-855-5200
5032 TAMPA WEST BLVD.
TAMPA, FL 33634
813-885-2052
813-882-4372 (FAX)

PREPARED FOR:

MURPHY OIL USA, INC.

422 NORTH WASHINGTON AVENUE
EL DORADO, AR 71730
PH: 870-875-7629

UTILITY DETAILS

MURPHY OIL USA
WILDWOOD, FL

EAST COUNTY ROAD 466
WILDWOOD, FL

Date:	5/25/10
Drawn:	RSM
Checked:	MGL

C-15

Sheet

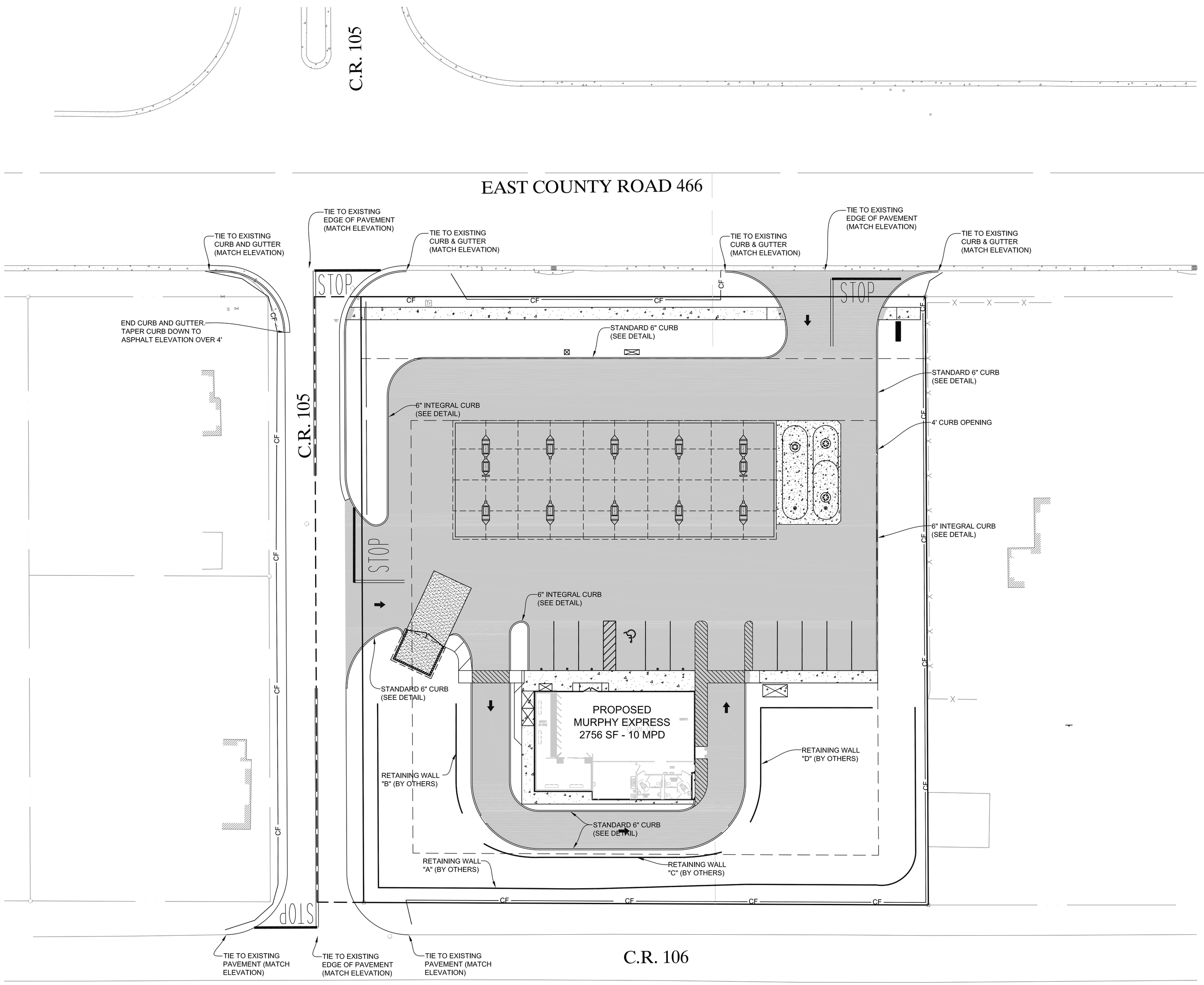

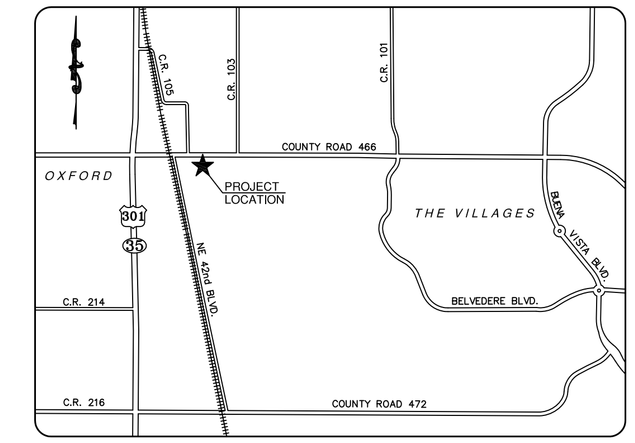

VICINITY MAP
(NOT TO SCALE)

LEGEND

EXISTING	PROPOSED	DESCRIPTION
		4" CONCRETE SIDEWALK
		5" CONCRETE PAVEMENT
		8" CONCRETE PAVEMENT FOR TANK PAD
		8" CONCRETE PAVEMENT FOR DUMPSTER PAD
		CONCRETE CURB AND GUTTER
		INTEGRAL CURB
		SITE LIGHTING

GENERAL PAVING NOTES

1. UNLESS OTHERWISE SHOWN, CALLED OUT OR SPECIFIED HEREON ALL CURB AND GUTTER ADJACENT TO ASPHALT PAVING SHALL BE INSTALLED PER PROVIDED DETAILS. SEE GALLOWAY PLANS FOR ASSOCIATED PLANS FOR CANOPY, COLUMN, PUMP ISLAND DETAILS AND LAYOUT.

2. THE LOCATION OF THE CONSTRUCTION FENCE ON THE DRAWINGS IS FOR GRAPHICAL REPRESENTATION ONLY. THE CONTRACTOR IS TO ENSURE THAT THE CONSTRUCTION FENCE ENCOMPASSES THE ENTIRE WORK AREA.

3. UNLESS OTHERWISE NOTED, ALL ON-SITE CURB AND GUTTER SHALL BE STANDARD CURB AS SHOWN ON THE DETAIL SHEET.

4. CONTRACTOR TO DYE CONCRETE ON ASPHALT REPAIRS AND UTILITY CUT REPAIRS TO MATCH SURROUNDING ASPHALT.

5. UNLESS OTHERWISE SHOWN, CALLED OUT OR SPECIFIED HEREON ALL CURB AND GUTTER ADJACENT TO ASPHALT PAVING SHALL BE INSTALLED PER PROVIDED DETAILS (SITE DETAILS SHEET). PAVING SHALL BE INSTALLED IN ACCORDANCE WITH THE PAVING PLAN OVER THE ENTIRE PARKING LOT AREA AND ALL APPROACH DRIVES. SEE ASSOCIATED PLANS FOR CANOPY, COLUMN, PUMP ISLAND DETAILS AND LAYOUT.

N

0 20 40 60
SCALE: 1" = 20'

REVISIONS

ISSUED	COMMENT

COMMERCIAL SITE SOLUTIONS, INC.
SITE PLANNING • ENGINEERING
402 EAST 1ST AVENUE
EASLEY, SC 29640
864-855-5200
5032 TAMPA WEST BLVD.
TAMPA, FL 33634
813-885-2052
813-882-4372 (FAX)

PREPARED FOR:
MURPHY OIL USA, INC.
422 NORTH WASHINGTON AVENUE
EL DORADO, AR 71730
PH: 870-875-7629

PAVING PLAN

MURPHY OIL USA
WILDWOOD, FL
EAST COUNTY ROAD 466
WILDWOOD, FL

Date:	5/25/10
Drawn:	MGL
Checked:	---

C-16
Sheet

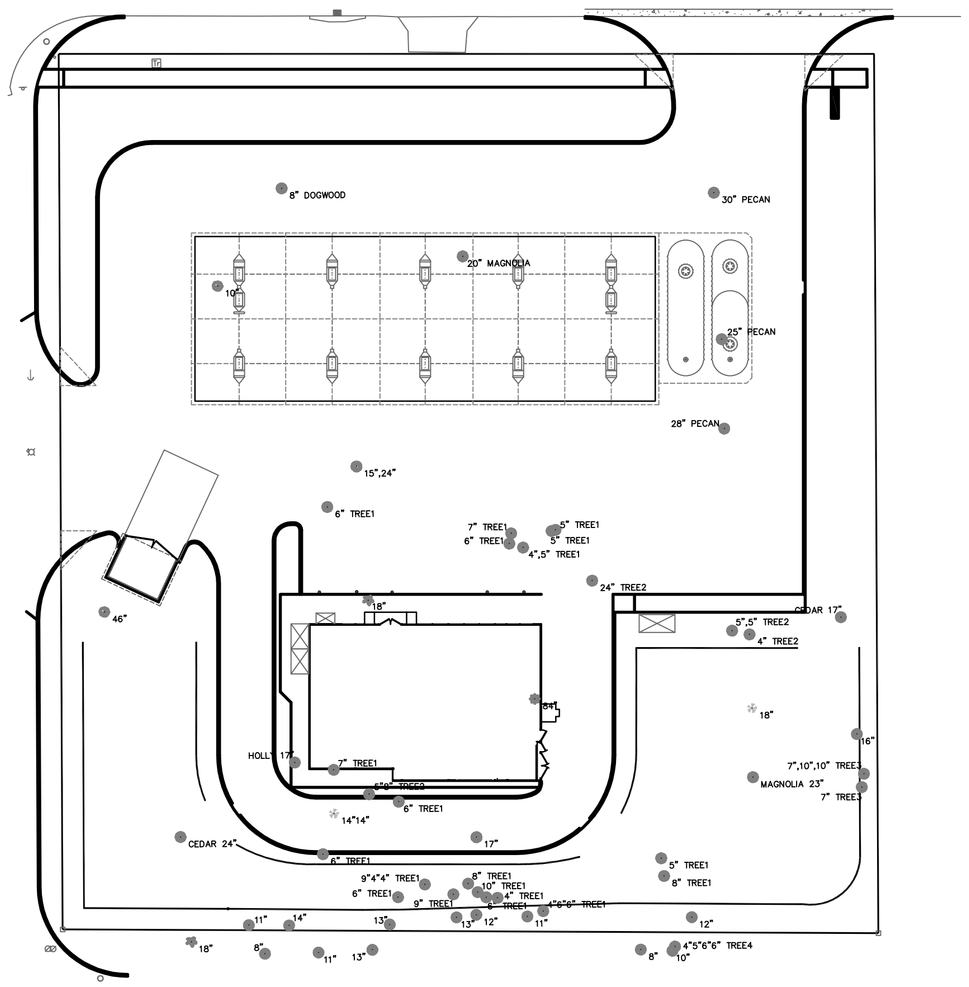

EXISTING TREE LOCATION PLAN

PLANT LIST

SYM.	COMMON NAME	QTY.
EXISTING TREES TO REMAIN		
OAK		1

46" DBH

SYM.	QTY.	BOTANICAL NAME	COMMON NAME	DESCRIPTION
CANOPY TREES				
QV	8	QUERCUS VIRGINIANA	LIVE OAK	MIN. 8' HT , 2." CAL.
SP	16	SABAL PALMETTO	CABBAGE PALM	AS SHOWN ON PLAN
SHRUBS AND GROUNDCOVERS				
AS	93	ACCA SELLOWIANA	PINEAPPLE GUAVA, FEIJOA	MIN. 7 GAL., MIN 4' HT., 42" OC., FULL, TO BE MAINTAINED AT 6' HT
GG	18	GALPHINIA GLAUCA	THRYALLIS	MIN 3 GAL., MIN. 24" HT X24"WIDE
RI	16	RHAPHIOLEPIS INDICA	INDIAN HAWTHORN	3 GAL., 12"-15" HT MIN., 30" O.C.
VO	164	VIBURNUM OBOVATUM	WALTER'S VIBURNUM	MIN. 3 GAL, MIN. 30" HT, FULL REFER TO DETAIL ON SHEET L2 FOR PLANTING REQ.
TA	--	TRACHELOSPERMUM ASIATICUM 'ANGYO'	JASIMINE	MIN. 1 GAL., MIN 6" HT., 24" C.
BAHIA	BY CONTR.	PASPALUM NOTATUM 'ARGENTINE'	ARGENTINE BAHIA SOD	SOLID SOD, CONTRACTOR TO VERIFY QTY.

LANDSCAPE NOTES:

- TREE PROTECTION BARRIERS MUST BE CONSTRUCTED SURROUNDING ALL EXISTING TREES PROPOSED TO BE SAVED LOCATED WITHIN DEMOLITION/CONSTRUCTION ZONES.

- IRRIGATION SYSTEMS MUST INCLUDE RAIN SENSORS AND IRRIGATION TIMERS TO CONSERVE WATER USAGE. REFER TO IRRIGATION PLAN FOR FURTHER INFORMATION.

- IF SPECIFIED PLANTS ARE UNAVAILABLE AT TIME OF CONSTRUCTION, CONTRACTOR MAY REPLACE SPECIFIED PLANTS WITH PLANTS APPROVED BY LANDSCAPE ARCHITECT AND CITY STAFF.

- ALL OPEN SPACE AREAS WITHIN THE PROPERTY SHALL BE SODDED UNLESS PAVED, SEEDED & MULCHED OR PLANTED WITH SHRUBS & GROUND COVER.

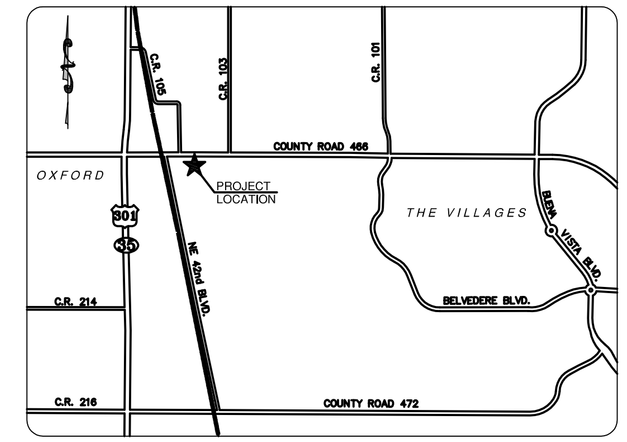

VICINITY MAP
(NOT TO SCALE)

SITE INFO:

SITE AREA (ON-SITE ONLY) 55,883 SF
PERVIOUS AREA = 20,733 SF
IMPERVIOUS AREA 35,150 SF

SAVED: ONE (1) EXISTING 46" OAK TREE

PROPOSED BUFFER YARDS:
NORTH BUFFER: COMMERCIAL NEXT TO RIGHT OF WAY, NONE REQUIRED,
SOUTH BUFFER: COMMERCIAL NEXT TO RIGHT OF WAY, NONE REQUIRED

EAST: COMMERCIAL NEXT TO RESIDENTIAL = 20' WIDE BUFFER REQUIREMENT WITH A MINIMUM 6' HEIGHT EVERGREEN SHRUIB.

WEST BUFFER: COMMERCIAL NEXT TO RIGHT OF WAY, NONE REQUIRED

PARKING LOT BUFFER REQUIREMENTS:
PARKING MUST BE LANDSCAPED AND PROTECTED SO AS TO SEPARATE AND SCREEN ANY PARKING AREA FROM ADJACENTS STREETS AND USES. INTERIOR LANDSCAPING AREAS ARE REQUIRED.

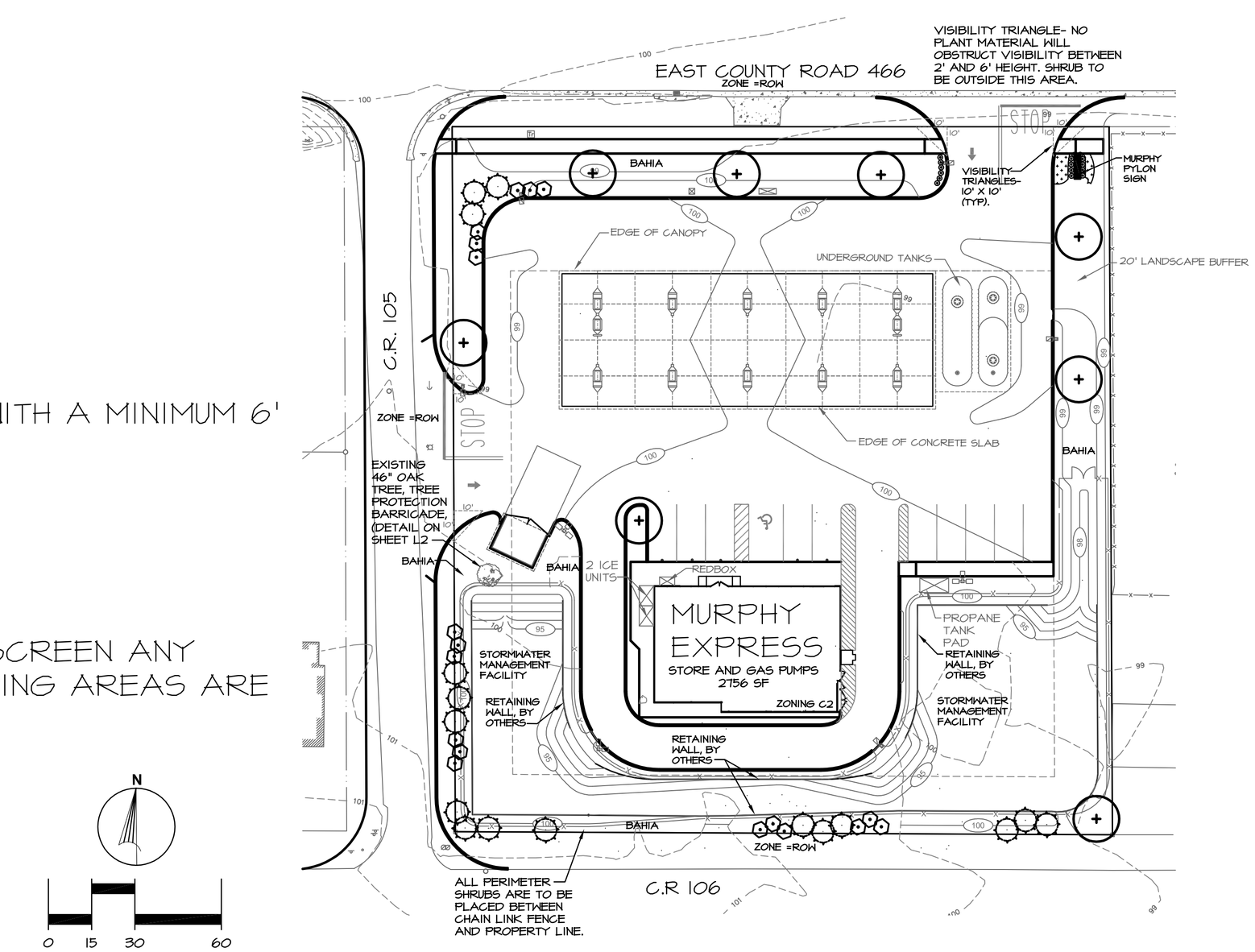

REVISIONS

ISSUED	COMMENT

b.l.bernardo designs
LANDSCAPE ARCHITECTURE - PLANNING
COMPUTER GRAPHICS & IMAGING
1308 Falcon Drive, Orlando, FL
blbernardo@live.com
Phone: (407) 415.5530 Fax: (407) 396.3659

BRIAN L. BERNARDO, RLA
LICENSE NUMBER 2887
STATE OF FLORIDA
date: 5-24-10

PREPARED FOR:
MURPHY OIL USA, INC.
422 NORTH WASHINGTON AVENUE
EL DORADO, AR 71730
PH: 870-875-7629

PRELIMINARY LANDSCAPE PLAN
MURPHY OIL USA
WILDWOOD, FL
EAST COUNTY ROAD 466
WILDWOOD, FL

Date: 5-24-10
Drawn: BLB
Checked: BLB

L-1
Sheet

LANDSCAPE NOTES:

1. The Landscape Contractor shall review architectural/engineering plans and become thoroughly familiar with surface and subsurface utilities.

2. The work shall be coordinated with other trades to prevent conflicts. Coordinate the planting with the irrigation work to assure availability and proper location of irrigation items and plants.

3. The landscape Contractor shall be responsible for all materials and all work as called for on the Landscape Plans and in the Landscape Specifications. In the event of variation between quantities shown on plant list and the plans, the plans shall control. The Landscape Contractor shall verify all quantities and report any discrepancies at the time of bidding.

4. Except as otherwise specified, the Landscape Contractor's work shall conform to accepted horticultural practices as used in the trade.

5. Every possible safeguard shall be taken to protect building surfaces, equipment and furnishings. The Landscape Contractor shall be responsible for any damage or injury to person or property which may occur as a result of negligence in the execution of the work.

6. All planting shall be performed by personnel familiar with planting procedure and under the supervision of a qualified planting foreman.

7. All plant material shall be graded Florida No. 1 or better as outlined under Grades and Standards for Nursery Plants, Part I and II, published by the Florida Department of Agriculture and Consumer Services or to the standards as given in the latest "American Standard for Nursery Stock," American National Standards Institute.

8. The minimum acceptable size of all plants, measured after pruning, with branches in normal positions, shall conform to the measurements specified on the plant list or as indicated on the landscape drawing. Height and spread dimensions refer to main body of the plant and not extreme branch tip to tip. The caliper of new tree trunks 4" and below is to be taken 6" inches above the soil level. The caliper of new tree trunks over 4" is to be taken 12" inches above the soil level.

9. The Landscape Architect or Owner shall have the right, at any stage of the operations, to reject any and all work and materials which, in his opinion, do not meet with the requirements of these specifications.

10. Plants shall be protected upon arrival at the site, by being thoroughly watered and properly maintained until planted.

11. The Landscape Contractor shall be responsible for proper watering of all plants. All plants shall be thoroughly watered at time of planting and kept adequately watered until time of acceptance. It shall be the Landscape Contractor's responsibility to assure that plants are not over watered.

12. It shall be the Landscape Contractor's responsibility to prevent plants from falling or being blown over, to restraighten and replant all plants which lean or fall and to replace all plants which are damaged due to lack of proper guying or staking. The Landscape Contractor shall be legally liable for any damage caused by instability of any plant material.

13. All trees and all palms shall be guyed or staked or braced. The Landscape Contractor shall determine which small or multi-trunk trees need to be guyed and staked to maintain plumb. Staking of trees and shrubs, if required, shall be done as per staking and guying detail prepared by the Landscape Architect. It shall be the responsibility of the Landscape Contractor to remove guys and stakes from the trees & job site after a period of 1 year.

14. Plants blown over by high winds, within the guaranteed period, shall not be cause for additional expense to the Owner, but shall be the responsibility of the Landscape Contractor. Damaged plants shall be replaced by the Landscape Contractor at no additional cost to the Owner.

15. The Landscape Contractor shall prune, shape and remove dead foliage/limbs from existing plant material to remain. Confirm with the Landscape Architect or Owner the extent of work required at time of bidding.

16. Sod shall be certified to be free of the imported fire ant. Sod shall have a clean growth of acceptable grass, reasonably free of weeds with not less than 1 1/2" of soil firmly adhering to roots. It shall be the responsibility of the Landscape Contractor to measure and determine the exact amount required. This amount shall be verified with the Owner or Landscape Architect before installation.

17. All plant beds shall be top dressed with a minimum of 3" shredded hardwood mulch (or approved equal).

18. The Landscape Contractor shall insure that his work does not interrupt established or projected drainage patterns.

19. The Landscape Contractor shall insure adequate vertical drainage in all plant beds, planters, and sod areas. Vertical drilling through any compacted fill to native soil shall be accomplished to insure drainage. If well drained fill is necessary to assure positive drainage, this issue shall be brought up by the Landscape Contractor at time of bidding.

20. All tree pits shall be excavated to size and depth in accordance with the USDA Standard for Nursery Stock 260.1, unless shown otherwise on the drawings, and backfilled with the specified planting soil. The Landscape Contractor shall test fill all tree pits with water before planting to assure proper drainage percolation is available.

21. The Landscape Contractor shall be responsible for determining and evaluating which plant materials are suitable for transplanting and shall verify this with the Landscape Architect or Owner. The Landscape Contractor shall take all reasonable, horticulturally acceptable measures to assure the successful transplanting of determined plant materials. The Landscape Contractor shall be responsible for replacing any relocated plant materials which die if such measures are not taken, as determined by the Landscape Architect or Owner. Replacement plants shall be of identical species and size if required.

22. Maintenance shall commence after each plant is planted and the maintenance period shall continue until the job or specific phase of the job is accepted by the Landscape Architect or Owner. Extreme care shall be taken to instruct the Owner or his representatives in general maintenance procedures.

23. Plant maintenance shall include watering, pruning, weeding, cultivating, mulching, tightening, and repairing of guys, replacement of sick or dead plants, resetting plants to proper grades or upright positions and restoration of the planting saucer and all other care needed for proper growth of the plants.

24. During the maintenance period and up to the date of final acceptance, the Landscape Contractor shall do all seasonal spraying and/or dusting of trees and shrubs. Upon completion of all planting, an inspection for acceptance of work will be held. The Landscape Contractor shall notify the Landscape Architect or Owner for scheduling of the inspection 10 days prior to the anticipated date. At the time of the inspection, if all of the materials are acceptable, a written notice will be given by the Landscape Architect or Owner to the Landscape Contractor Stating the date when the Maintenance Period ends.

25. At the end of the guarantee period, any plant required under this contract that is dead or not in satisfactory growth, as determined by the Owner or the Landscape Architect, shall be removed and replaced. Replacement plants shall have an extended guarantee, as noted above, from time of replacement. All replacements shall be planted of the same kind and size as specified on the plant list. They shall be the responsibility of the Landscape Contractor.

26. All plant materials shall be guaranteed for one (1) year from the time of final inspection and interim acceptance shall be alive and in satisfactory growth for each specific kind of plant at the end of the guaranteed period.

27. Topsoil shall be ASTM D 5268, natural, friable, fertile, fine loamy soil possessing characteristics of representative topsoil in the vicinity that produces heavy growth. Topsoil shall have a pH range of 5.5 to 7.4 percent, free from subsoil, objectionable weeds, litter, sods, stiff clay, stones larger than 1-inch in diameter, stumps, roots, trash, toxic substances, or any other material which may be harmful to plant growth or hinder planting operations. Top soil shall contain a minimum of three percent organic material.

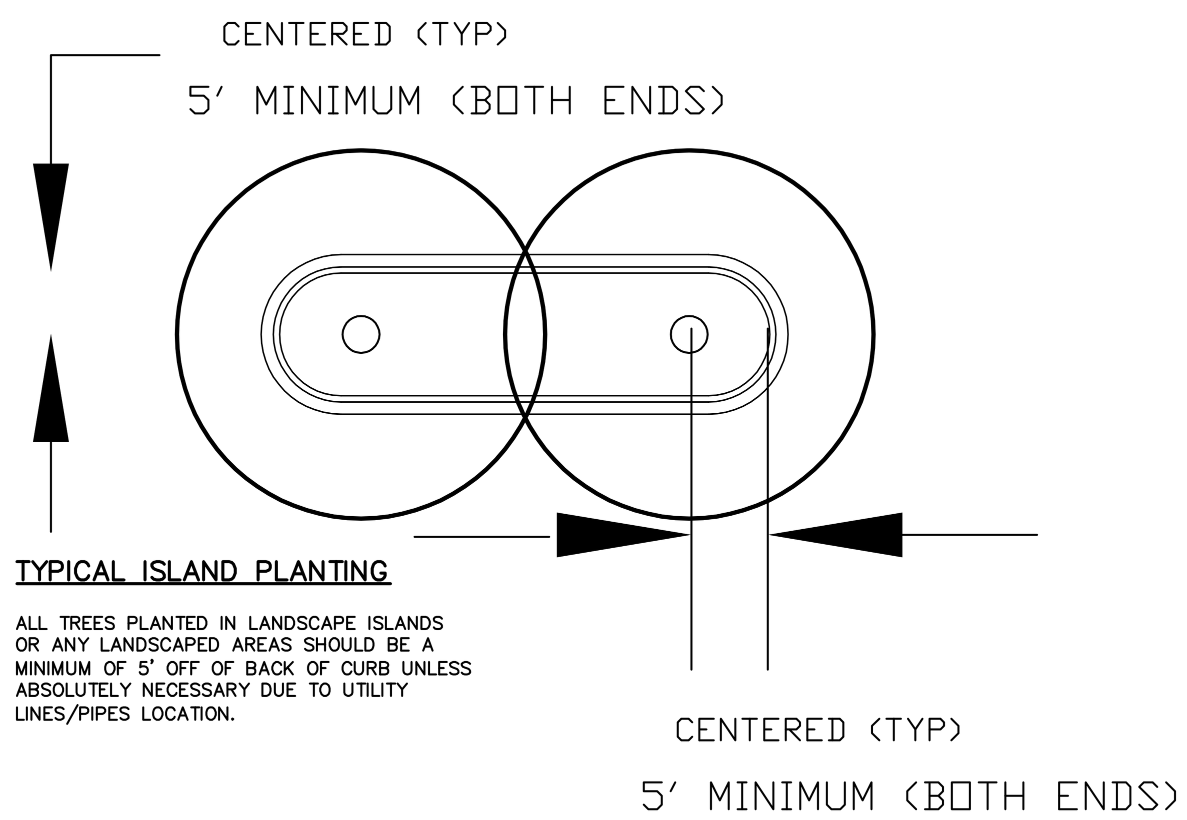

TYPICAL ISLAND PLANTING

ALL TREES PLANTED IN LANDSCAPE ISLANDS OR ANY LANDSCAPED AREAS SHOULD BE A MINIMUM OF 5' OFF OF BACK OF CURB UNLESS ABSOLUTELY NECESSARY DUE TO UTILITY LINES/PIPES LOCATION.

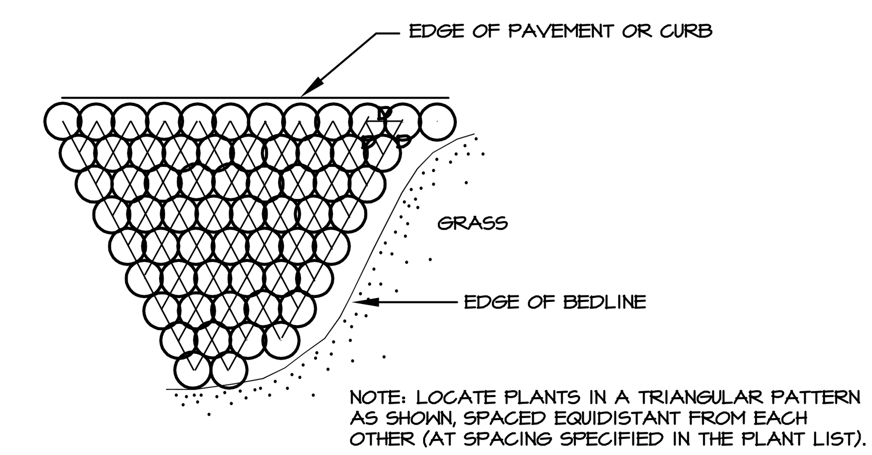

SHRUB/GROUNDCOVER SPACING PLAN

N.T.S.

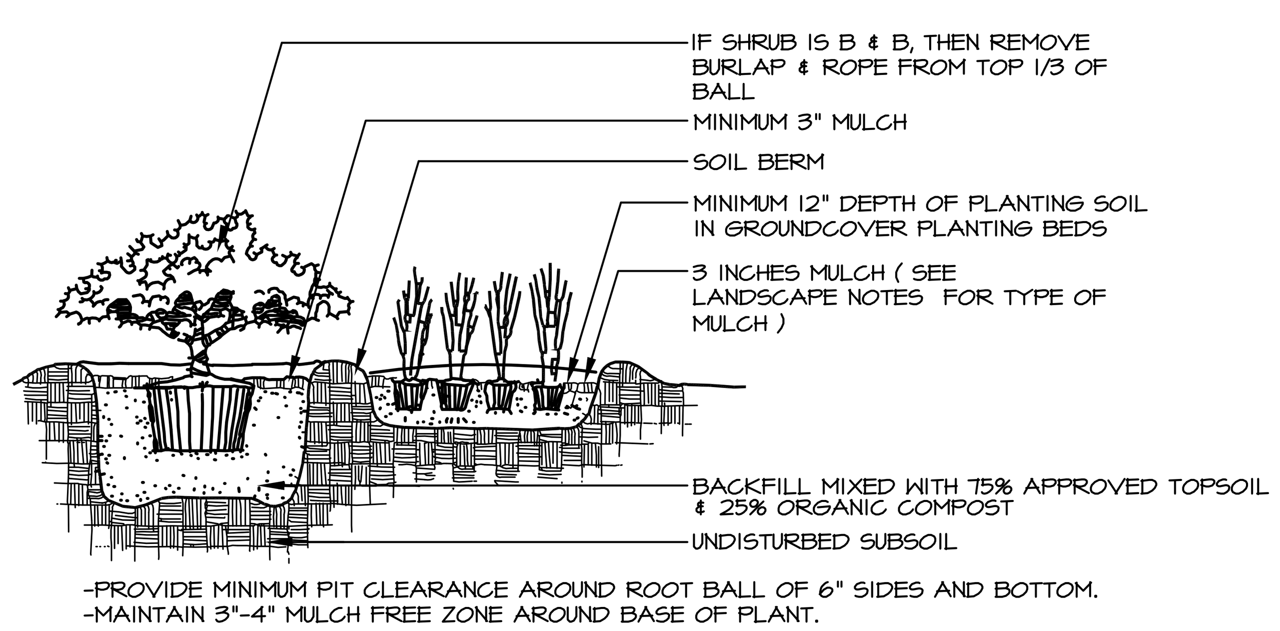

SHRUB AND GROUNDCOVER PLANTING DETAIL

NTS

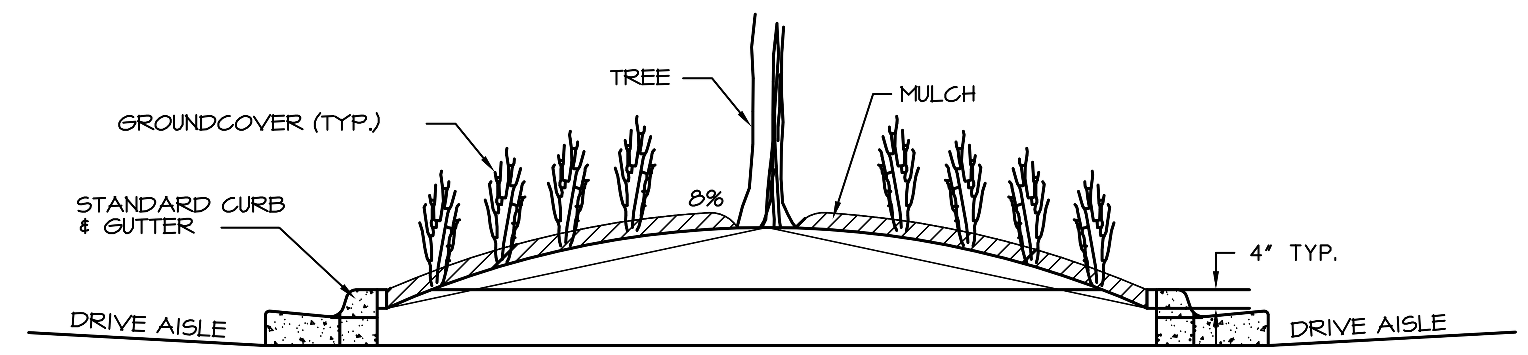

TYPICAL LANDSCAPE ISLANDS

NTS

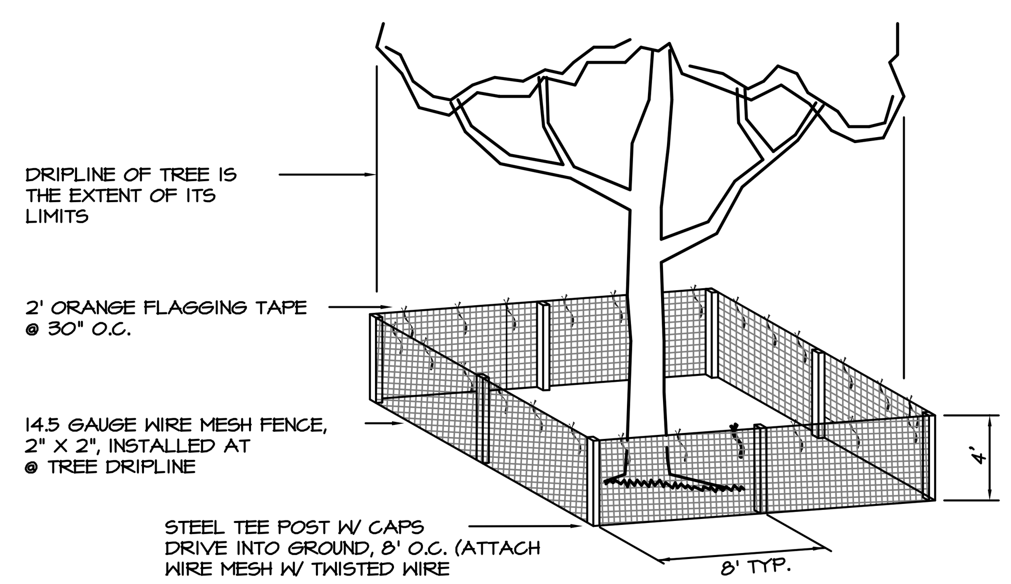

TREE PROTECTION DETAIL

N.T.S.

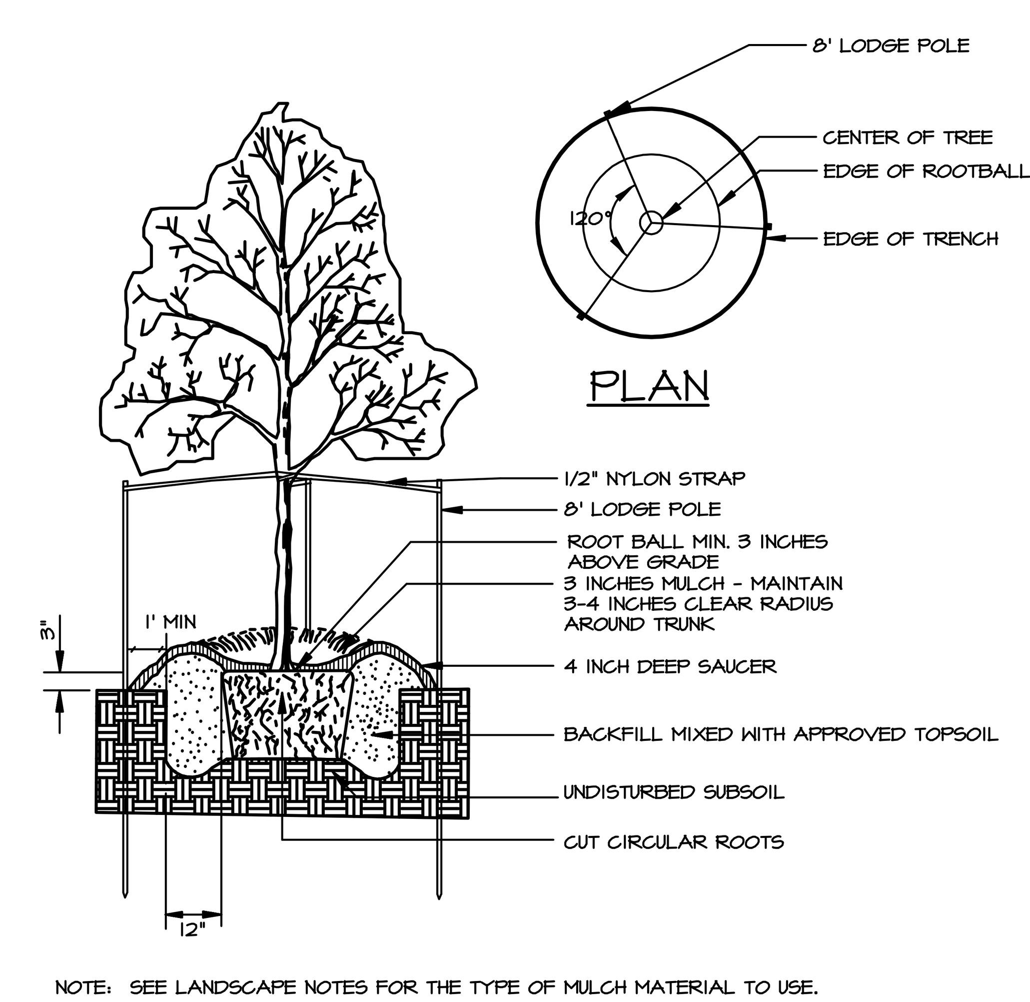

NOTE: SEE LANDSCAPE NOTES FOR THE TYPE OF MULCH MATERIAL TO USE.

CONTAINER TREE PLANTING DETAIL

N.T.S.

REVISIONS	
ISSUED	COMMENT

Registered Landscape Architect — Bonnie Lee Bernardo — LA 6666687 — State

bonnie l. bernardo, RLA
LA6666687

date: 5-24-10

b.l.bernardo designs
LANDSCAPE ARCHITECTURE - PLANNING
COMPUTER GRAPHICS & IMAGING
1308 Falcon Drive, Orlando, FL
blbernardo@live.com
Phone: (407) 415.5390 Fax: (407) 396.3659

PREPARED FOR:

MURPHY OIL USA, INC.

422 NORTH WASHINGTON AVENUE
EL DORADO, AR 71730
PH: 870-875-7629

PRELIMINARY LANDSCAPE PLAN

MURPHY OIL USA
WILDWOOD, FL

EAST COUNTY ROAD 466
WILDWOOD, FL

Date: 5-24-10
Drawn: BLB
Checked: BLB

L-2
Sheet