The Villages®

PRELIMINARY / ENGINEERING PLAN OF CAPTIVA VILLAGE RECREATION CENTER (SC-322 VR)

LEGAL DESCRIPTION

CAPTIVA VRC:
A PARCEL OF LAND BEING PORTIONS OF SECTION 1 AND 12, TOWNSHIP 19 SOUTH, RANGE 23 EAST SUMTER COUNTY, FLORIDA, BEING DESCRIBED AS FOLLOWS:

COMMENCE AT THE SOUTHEAST CORNER OF THE SOUTHWEST 1/4 OF SAID SECTION 1; THENCE N89°45'19"W, ALONG THE SOUTH LINE OF SAID SOUTHWEST 1/4 A DISTANCE OF 794.86 FEET TO THE POINT OF BEGINNING; THENCE DEPARTING SAID SOUTH LINE S02°55'31"E, 31.06 FEET; THENCE S02°08'42"E, 70.01 FEET; THENCE S87°04'29"W, 391.18 FEET; THENCE S80°34'23"W, 30.00 FEET; THENCE N09°25'37"W, 149.31 FEET TO THE POINT OF CURVATURE OF A CURVE CONCAVE EAST AND HAVING A RADIUS OF 700.00 FEET; THENCE NORTHERLY ALONG THE ARC OF SAID CURVE THROUGH A CENTRAL ANGLE OF 25°38'05", AN ARC DISTANCE OF 313.19 FEET TO THE POINT OF TANGENCY; THENCE N16°12'28"E, 59.27 FEET TO THE POINT OF CURVATURE OF A CURVE CONCAVE WEST AND HAVING A RADIUS OF 700.00 FEET; THENCE NORTHERLY ALONG THE ARC OF SAID CURVE THROUGH A CENTRAL ANGLE OF 06°55'30", AN ARC DISTANCE OF 84.60 FEET; THENCE DEPARTING SAID CURVE ALONG A NON-TANGENT LINE RUN S76°09'38"E, 17.54 FEET TO THE POINT OF CURVATURE OF A CURVE CONCAVE NORTH AND HAVING A RADIUS OF 1,200.00 FEET; THENCE EASTERLY ALONG THE ARC OF SAID CURVE THROUGH A CENTRAL ANGLE OF 16°44'26", AN ARC DISTANCE OF 350.61 FEET; THENCE DEPARTING SAID CURVE ALONG A NON-TANGENT LINE RUN S02°55'31"E, 433.94 FEET TO THE POINT OF BEGINNING.

CONTAINING 5.40 ACRES, MORE OR LESS.

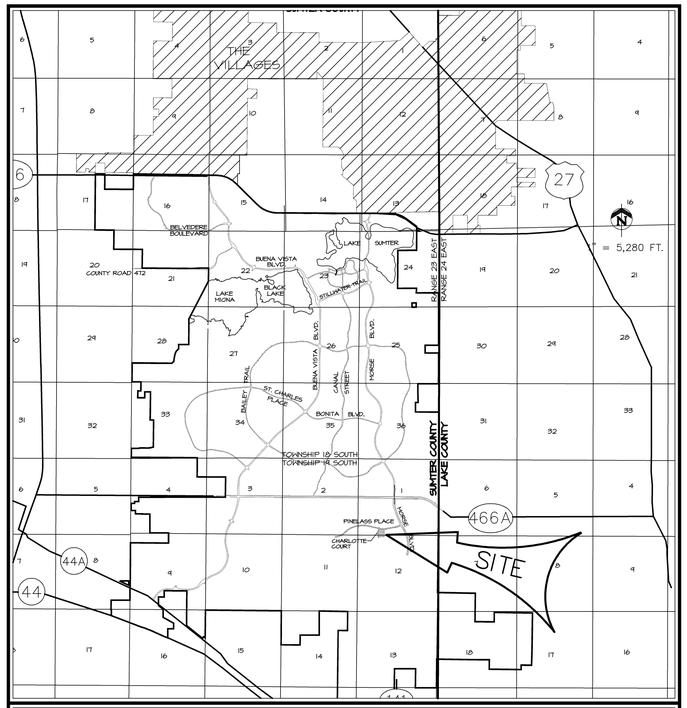

VICINITY MAP

SECTIONS 1 AND 12
TOWNSHIP 19 SOUTH; RANGE 23 EAST
SUMTER COUNTY, FLORIDA

INDEX OF SHEETS

1. TITLE SHEET
2. AERIAL PHOTOGRAPH
3. MASTER DEVELOPMENT PLAN
4. SITE PLAN
5. GRADING PLAN
6. STORM DRAINAGE PLAN
7. WATER DISTRIBUTION AND SANITARY SEWER PLAN

EC-1 EROSION CONTROL MASTER PLAN
~~SLV-1 UTILITY SLEEVING PLAN~~
~~L1 SITE LIGHTING~~
~~L2 IRRRIGATION SLEEVING~~

NOTES:

1. THE STANDARD DETAILS FOR THIS PROJECT SHALL BE FOUND IN "THE VILLAGES CONSTRUCTION & DEVELOPMENT MANUAL, DATED MAY 01, 2009. PREPARED BY GRANT & DZURO OR AS AMENDED BY THESE PLANS.
2. FOR SWFWMD PURPOSES ONLY: REFERENCE PERMIT #44024899.081 FOR THE VILLAGES STANDARD DETAIL MANUAL.
3. ELEVATIONS SHOWN WERE OBTAINED BY SURVEY AND ARE BASED ON THE VILLAGES DATUM. TO OBTAIN N.G.V.D. ADD 3.46 FEET.
4. NO CHANGES SHALL OCCUR TO THE LAYOUT, DESIGN OR ANY OTHER ASPECT OF THE PLAN, WITHOUT RE-SUBMITTAL AND SUBSEQUENT APPROVAL BY THE VILLAGES OF ANY REQUESTED REVISIONS. UPON COMPLETION OF THE SITE WORK, THE VILLAGES WILL INSPECT THE FINISHED CONSTRUCTION AND DETERMINE WHETHER THE COMPLETED JOB MEETS THE APPROVED SUBMITTAL PLANS AND SPECIFICATIONS. ANY DEFICIENCIES FOUND BY THE VILLAGES WILL BE IDENTIFIED IN WRITING TO THE PARCEL DEVELOPER, WHO SHALL IMMEDIATELY TAKE ALL CORRECTIVE ACTION NECESSARY TO REMEDY ANY DEFICIENCIES. FINAL APPROVAL FROM THE VILLAGES SHALL BE OBTAINED PRIOR TO SUBMITTAL OF THE FINAL CERTIFICATION OF COMPLETION TO SUMTER COUNTY BY THE PROJECT ENGINEER.

WATER AND WASTE WATER UTILITIES;

CENTRAL SUMTER UTILITIES (C.S.U.)
SUMTER WATER CONSERVATION AUTHORITY (SWCA)
C/O OMI
501 SUNBELT ROAD
THE VILLAGES, FLORIDA 32159
(352)259-2802 RUSS VAUGHN

UTILITY LOCATES:

SUNSHINE STATE ONE CALL OF FLORIDA, INC.
11 PLANTATION ROAD
DeBARY, FLORIDA 32713
DIAL 811

ELECTRICAL POWER UTILITIES;

SUMTER ELECTRIC COOPERATIVE INC.
3369 WEDGEWOOD LANE
THE VILLAGES, FLORIDA 32162
(352) 793-3801, EXT. 1330 DANNY BOYETT

TELEPHONE UTILITIES;

CENTURY LINK
13465 SE C.R. 25
OCKLAWAHA, FLORIDA 32179
(352)551-4343 MARK HOEVENAIR

NATURAL GAS UTILITY;

TECO / PEOPLES GAS
316 S.W. 33RD AVENUE
OCALA, FLORIDA 34474
(352)401-3419 LEE SAMANIEGO

CABLE UTILITIES;

COMCAST
8130 HIGHWAY 44 - LEG A
LEESBURG, FLORIDA 34788
(352)787-1875 DANNY FERGUSON

CABLE UTILITIES;

CLEARLINK COMMUNICATION, LLC
C/O McDONOUGH DEVELOPMENT SERVICES
3369 WEDGEWOOD LANE
THE VILLAGES, FLORIDA 32162
(352)753-6219 TOM McDONOUGH

CABLE UTILITIES;

VILLAGES FIBER OPTIC
10261 CANAL STREET
THE VILLAGES, FLORIDA 32162
(352)753-6218 TOM McDONOUGH

DECORATIVE SIGN POST;

LTS & COMPANY, INC.
513 W. COLONIAL DRIVE, SUITE 1
ORLANDO, FLORIDA 32804
(407) 843-7620 TOM VEAZEY

OWNER/DEVELOPER:
THE VILLAGES OF LAKE-SUMTER, INC.
990 OLD MILL RUN
VILLAGES, FL. 32162
JOHN R. GRANT, VICE PRESIDENT
(352) 753-6260

ENGINEER:
FARNER, BARLEY AND ASSOCIATES, INC.
4450 N.E. 83rd ROAD
WILDWOOD, FL 34785
JEFFREY A. HEAD, P.E., #58058
(352) 748-3126

FARNER BARLEY AND ASSOCIATES, INC.
▲ ENGINEERS ▲ SURVEYORS ▲ PLANNERS
Certificate of Authorization Number: 4709
4450 N.E. 83rd Road ○ Wildwood, Florida 34785 ○ (352) 748-3126

DATE	REVISIONS	BY

FARNER BARLEY AND ASSOCIATES, INC.
ENGINEERS ▲ SURVEYORS ▲ PLANNERS
Certificate of Authorization Number: 4709
4450 N.E. 83rd Road ○ Wildwood, Florida 34785 ○ (352) 748-3128

VILLAGES OF SUMTER
CAPTIVA VILLAGE RECREATION CENTER (SC-322 VR)

The Villages

AERIAL PHOTOGRAPH

DATE 11-17-10
DRAWN BY MJC
CHKD BY JAH
FILE NAME AERIAL
JOB NO. 921141.2023

SHT. 2 OF 7

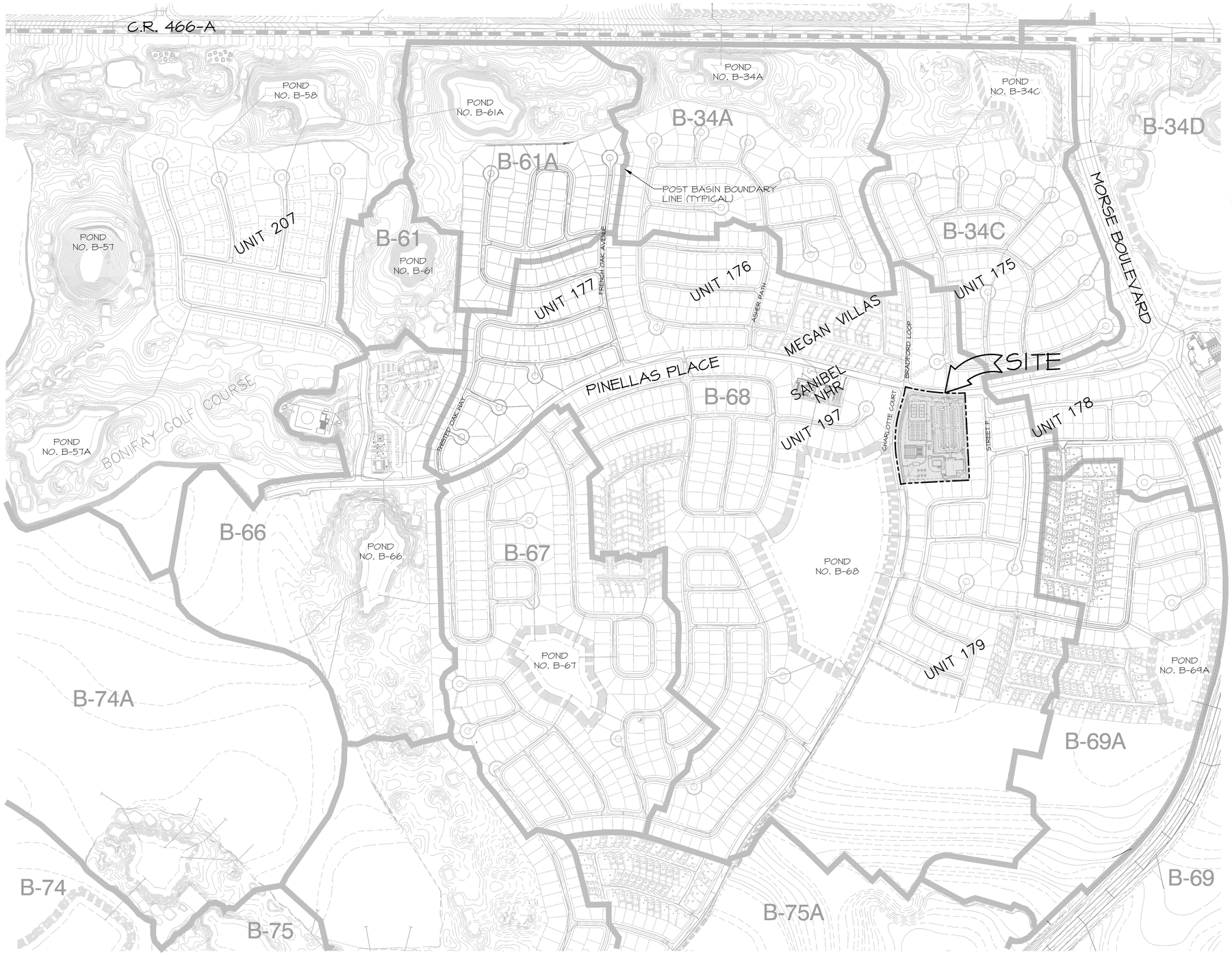

N

300 150 0 300 600 900

SCALE IN FEET
1"=300'

DATE	REVISIONS	BY

FARNER BARLEY AND ASSOCIATES, INC.
ENGINEERS ▲ SURVEYORS ▲ PLANNERS
Certificate of Authorization Number: 4709
4450 N.E. 83rd Road ○ Wildwood, Florida 34785 ○ (352) 748-3128

VILLAGES OF SUMTER
CAPTIVA VILLAGE RECREATION CENTER (SC-322 VR)

The Villages

MASTER DEVELOPMENT PLAN

DATE 11-17-10
DRAWN BY MJC
CHKD BY JAH
FILE NAME MDEV
JOB NO. 921141.2023

SHT. 3 OF 7

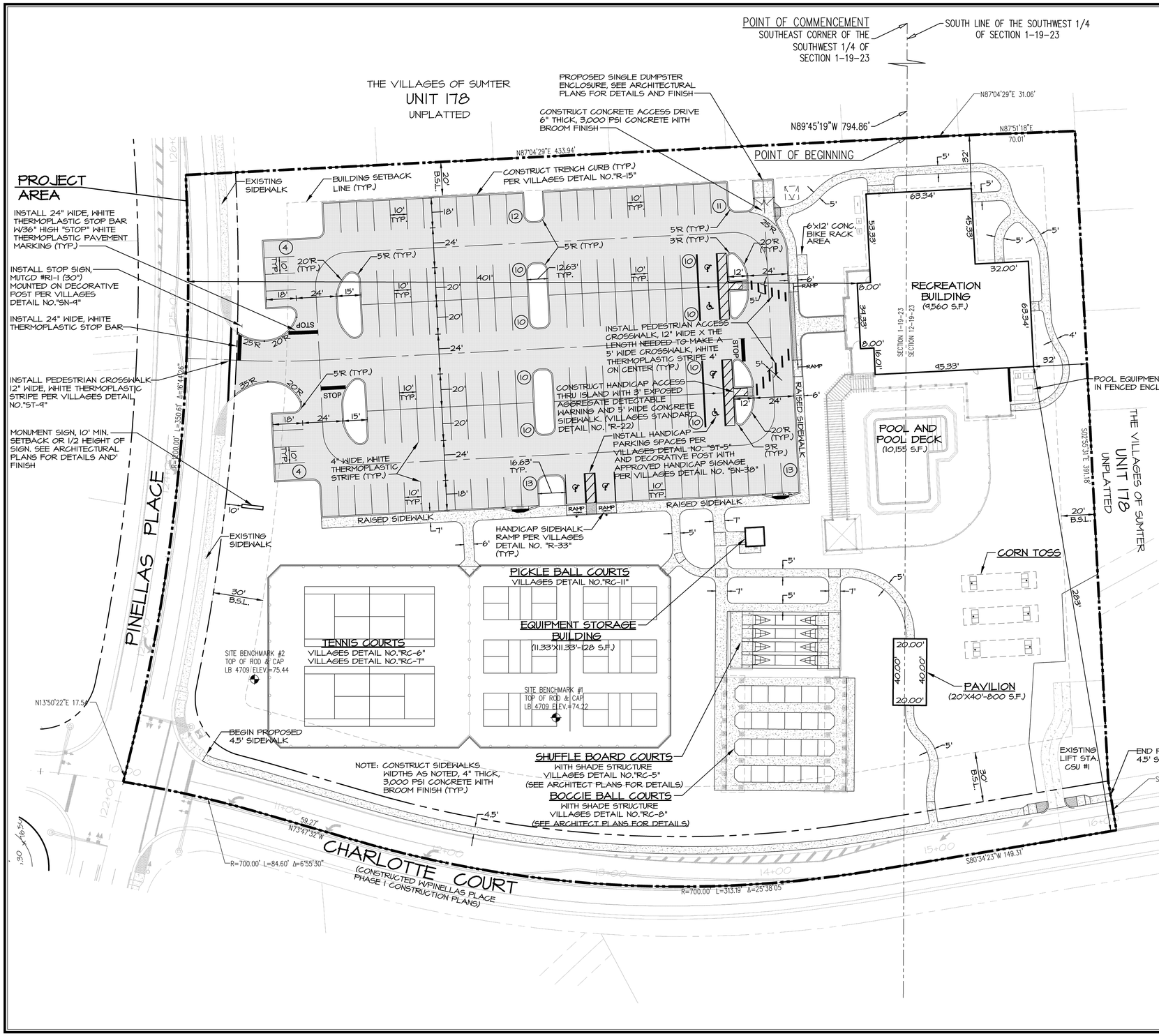

SITE DATA

1. TOTAL ACRES = 5.40 AC. (235,224 SQ. FT.)
2. ZONING = PUD (JULY 3, 2003)
3. PROJECT ADDRESS - TO BE ASSIGNED
4. RECREATION BUILDING - 1 STORY CONCRETE BLOCK, 26' HEIGHT
5. PARKING DATA: (1 SPACE PER 250 SQ. FT.)
   STANDARD PARKING SPACES (PROVIDED):
   10' x 18' SPACES = 55
   STANDARD PARKING SPACES (PROVIDED):
   10' x 20' SPACES = 76
   HANDICAP PARKING SPACES (PROVIDED):
   12' x 18' SPACES = 2
   HANDICAP PARKING SPACES (PROVIDED):
   12' x 20' SPACES = 4
   TOTAL PARKING PROVIDED: 137 SPACES
   HANDICAP PARKING SPACES (REQUIRED): 5 SPACES
6. ENGINEER/SURVEYOR - FARNER BARLEY & ASSOCIATES, INC.
   4450 N.E. 83RD ROAD
   WILDWOOD, FLORIDA 34785
   (352) 748-3126
7. SOIL TYPE - CANDLER SAND
8. PERMITTING AGENCIES:
   -SUMTER COUNTY -S.W.F.W.M.D. -D.E.P.
9. WATER AND SANITARY SEWER PROVIDED BY CENTRAL SUMTER UTILITY COMPANY.
10. UNDERGROUND ELECTRICAL TRANSMISSION SYSTEM PROVIDED BY SECO
11. SOLID WASTE BY LOCAL FRANCHISE.
12. TELEPHONE SERVICE BY CENTURY LINK.
13. IRRIGATION AND FIRE PROTECTION BY S.W.C.A.
14. GAS PROVIDED / SERVICED BY TECO.
15. LOCATED IN SECTIONS 2 AND 11, TOWNSHIP 19 SOUTH, RANGE 23 EAST, SUMTER COUNTY, FLORIDA.
16. MONUMENT SIGN SETBACKS PER SUMTER COUNTY LAND DEVELOPMENT REGULATIONS.
17. AREAS FOR TOTAL SITE (BASED ON FOOTPRINT, NOT INTERIOR SQ. FOOTAGE)

PROPOSED CLUB HOUSE BUILDING =	9,560 S.F. (0.22 AC.)	4%
PROPOSED POOL & POOL DECK =	10,155 S.F. (0.23 AC.)	4%
PROPOSED EQUIP. BLDG. & PAVILION =	988 S.F. (0.02 AC.)	0.4%
PROPOSED SIDEWALKS/PATIO/COURTS =	47,305 S.F. (1.09 AC.)	20%
PROPOSED PARKING / DRIVEWAY =	54,211 S.F. (1.24 AC.)	23%
EXISTING DRIVEWAY =	18,923 S.F. (0.43 AC.)	8%
IMPERVIOUS AREA =	141,142 S.F. (3.24 AC.)	60%
OPEN AREA =	94,082 S.F. (2.16 AC.)	40%
PROJECT AREA =	235,224 S.F. (5.40 AC.)	100%

BUILDING SETBACKS

* 30 FT FROM PINELLAS PLACE
* 0 FT FROM CONTIGUOUS PROPERTY LINE NOT ZONED RESIDENTIAL
* 30 FT FROM CHARLOTTE COURT
* 20 FT FROM CONTIGUOUS PROPERTY LINE ZONED RESIDENTIAL

NOTES:

1. IT IS THE RESPONSIBILITY OF THE CONTRACTOR TO RELOCATE ANY EXISTING UTILITIES IN CONFLICT WITH THIS PROPOSED SITE PLAN, AND TO COORDINATE RELOCATION WITH RESPECTIVE UTILITY PROVIDERS.
2. ALL RADII ARE 5' UNLESS INDICATED OTHERWISE.
3. ALL DIMENSION SHOWN ARE TO EOP UNLESS INDICATED OTHERWISE.
4. ALL TRAFFIC CONTROL SIGNS SHALL BE IN ACCORDANCE WITH THE MANUAL ON UNIFORM TRAFFIC CONTROL DEVICES.
5. ALL TRAFFIC FLOW ARROWS, STOP BARS AND TRAFFIC SEPARATION CENTERLINES SHALL BE THERMOPLASTIC PAINT.
6. SITE LIGHTING TO BE PROVIDED BY POLE MOUNTED LIGHT FIXTURES.
8. ON SITE GOLF CART PARKING NOT USED FOR REQUIRED PARKING CALCULATIONS.

NOTICE TO CONTRACTOR:

1. BEFORE DIGGING IT IS THE CONTRACTORS RESPONSIBILITY TO HAVE UNDERGROUND UTILITIES LOCATED FOR PROTECTION, SO AS NOT TO DISTURBI ANY UTILITIES REMAINING ON AND OFF SITE.

DATE	REVISIONS	BY

FARNER BARLEY AND ASSOCIATES, INC.
▲ ENGINEERS ▲ SURVEYORS ▲ PLANNERS
Certificate of Authorization Number: 4709
4450 N.E. 83rd Road o Wildwood, Florida 34785 o (352) 748-3126

The Villages

VILLAGES OF SUMTER
CAPTIVA VILLAGE RECREATION CENTER (SC 322-VR)

SITE PLAN

DATE 11-04-10
DRAWN BY MJC
CHKD BY JAH
FILE NAME SITEDWG
JOB NO. 921141.2023

SHT. 4 OF 7

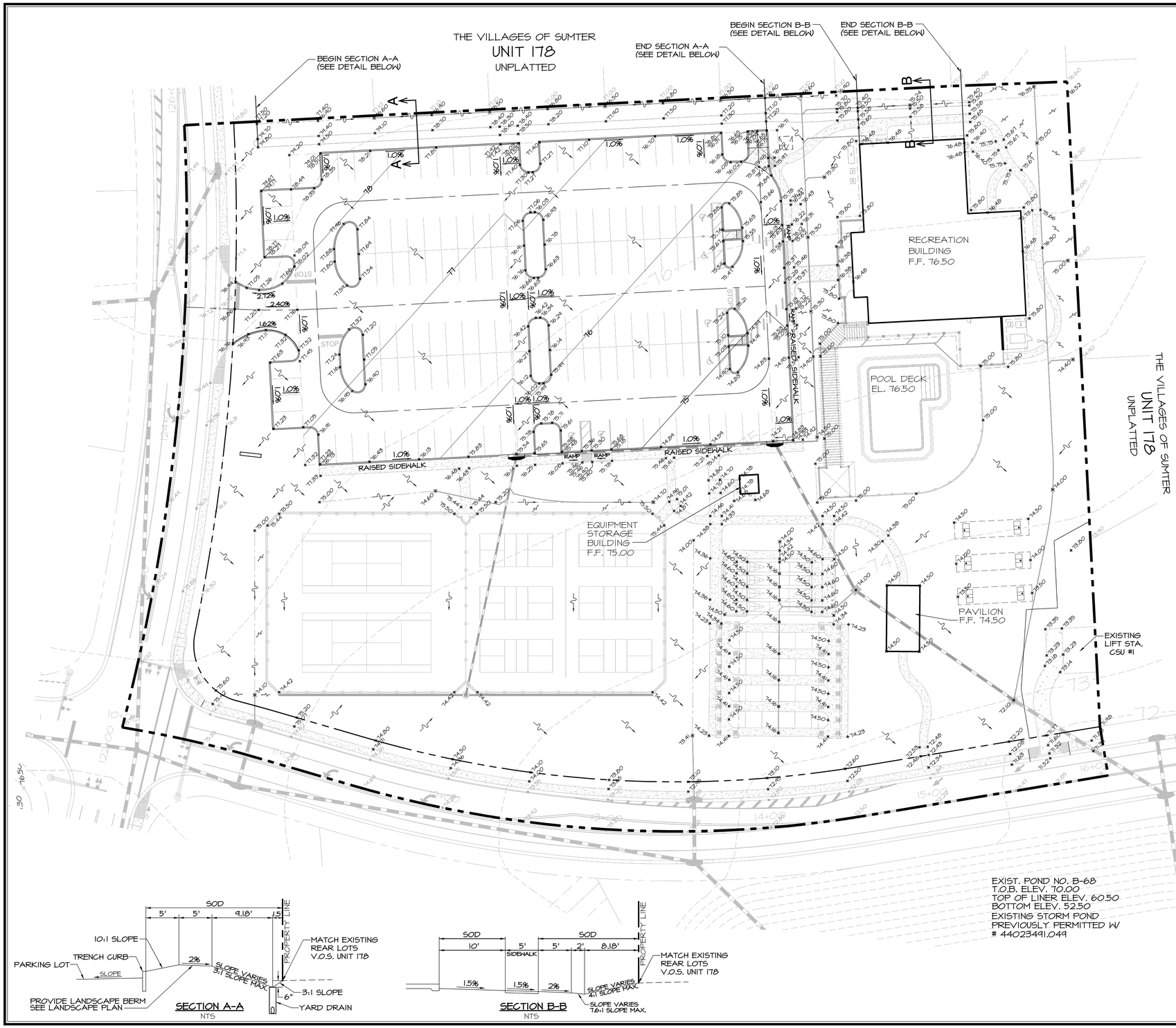

ROTATE 90°00'00"

30 15 0 30 60 90

SCALE IN FEET
1"=30'

LEGEND

- EXISTING CONTOUR LINE
- PROPOSED CONTOUR LINE
- PROPOSED PAVEMENT ELEVATION
- PROPOSED TOP OF CURB ELEVATION
- PROPOSED PAVEMENT ELEVATION
- EXISTING ELEVATION
- DIRECTION OF DRAINAGE

NOTES:

1. ELEVATIONS SHOWN ARE BASED ON THE VILLAGES DATUM. TO OBTAIN N.G.V.D. ADD 3.46 FEET.
2. ALL PROPOSED ELEVATIONS ARE SHOWN TO EDGE OF PAVEMENT UNLESS OTHERWISE NOTED.
3. THE STANDARD DETAILS FOR THIS PROJECT SHALL BE FOUND IN "THE VILLAGES CONSTRUCTION DETAILS, MAY 1, 2004" PREPARED BY GRANT & DZURO OR AS AMENDED BY THESE PLANS.
4. GENERALIZED BERM INFORMATION NOT PROVIDED. FINAL GRADING SHALL BE DONE UNDER THE DIRECTION OF LANDSCAPE ARCHITECT. SEE LANDSCAPE PLAN FOR BERM LOCATIONS AND SIZE.
5. THE STORMWATER RUNOFF FROM THIS PROJECT SITE DISCHARGES INTO PREVIOUSLY PERMITTED RETENTION / DETENTION PONDS LOCATED OFFSITE.
6. PROJECT IS NOT WITHIN 100 YR FLOOD PLANE PER FEMA PANEL 12029G0075B, AND IS LOCATED IN ZONE C.
7. FINISH FLOOR ELEVATIONS MAY BE ADJUSTED BASED ON "AS-BUILT" ELEVATION OF PROPOSED EDGE OF PAVEMENT ELEVATIONS AND ADJUSTED ACCORDINGLY BEFORE CONSTRUCTION OF PROPOSED BUILDING. COORDINATE WITH SITE ENGINEER BEFORE CONSTRUCTION OF BUILDING SLAB.
8. ALL HANDICAP ACCESSIBLE PARKING SPACES, HANDICAP ACCESSIBLE SIDEWALK ROUTES AND ALL SITE SIDEWALKS ARE NOT TO EXCEED A 2.00% MAXIMUM CROSS SLOPE. IF DURING FINAL BUILDING CERTIFICATION ANY OF THESES AREAS ARE FOUND EXCEEDING ACCESSIBILITY LIMITS (MAXIMUM 2.00%) FOR CERTIFICATE OF OCCUPANCY IT SHALL BE THE RESPONSIBILITY OF THE SITE CONTRACTOR TO REMOVE AND REPLACE ALL AREAS FOUND TO BE UNACCEPTABLE BY INSPECTOR. THIS WORK SHALL BE COMPLETED WITH NO ADDITIONAL COST TO OWNER AND/OR DESIGNERS.

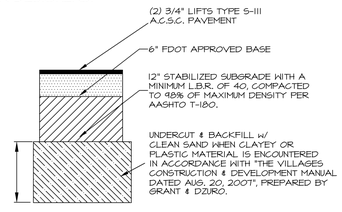

PARKING LOT
PAVEMENT SECTION

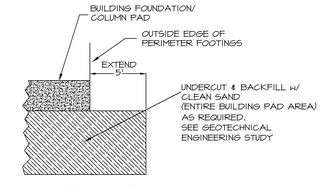

BUILDING PAD
SECTION

SECTION A-A
NTS

SECTION B-B
NTS

DATE	REVISIONS	BY

FARNER BARLEY AND ASSOCIATES, INC.
ENGINEERS ▲ SURVEYORS ▲ PLANNERS
Certificate of Authorization Number: 4709
4450 N.E. 83rd Road ○ Wildwood, Florida 34785 ○ (352) 748-3128

VILLAGES OF SUMTER
CAPTIVA VILLAGE RECREATION CENTER (SC 322-VR)

The Villages

GRADING PLAN

DATE 11-04-10
DRAWN BY MJC
CHKD BY JAH
FILE NAME GRADEPNG
JOB NO. 921141.2023

SHT. 5 OF 7

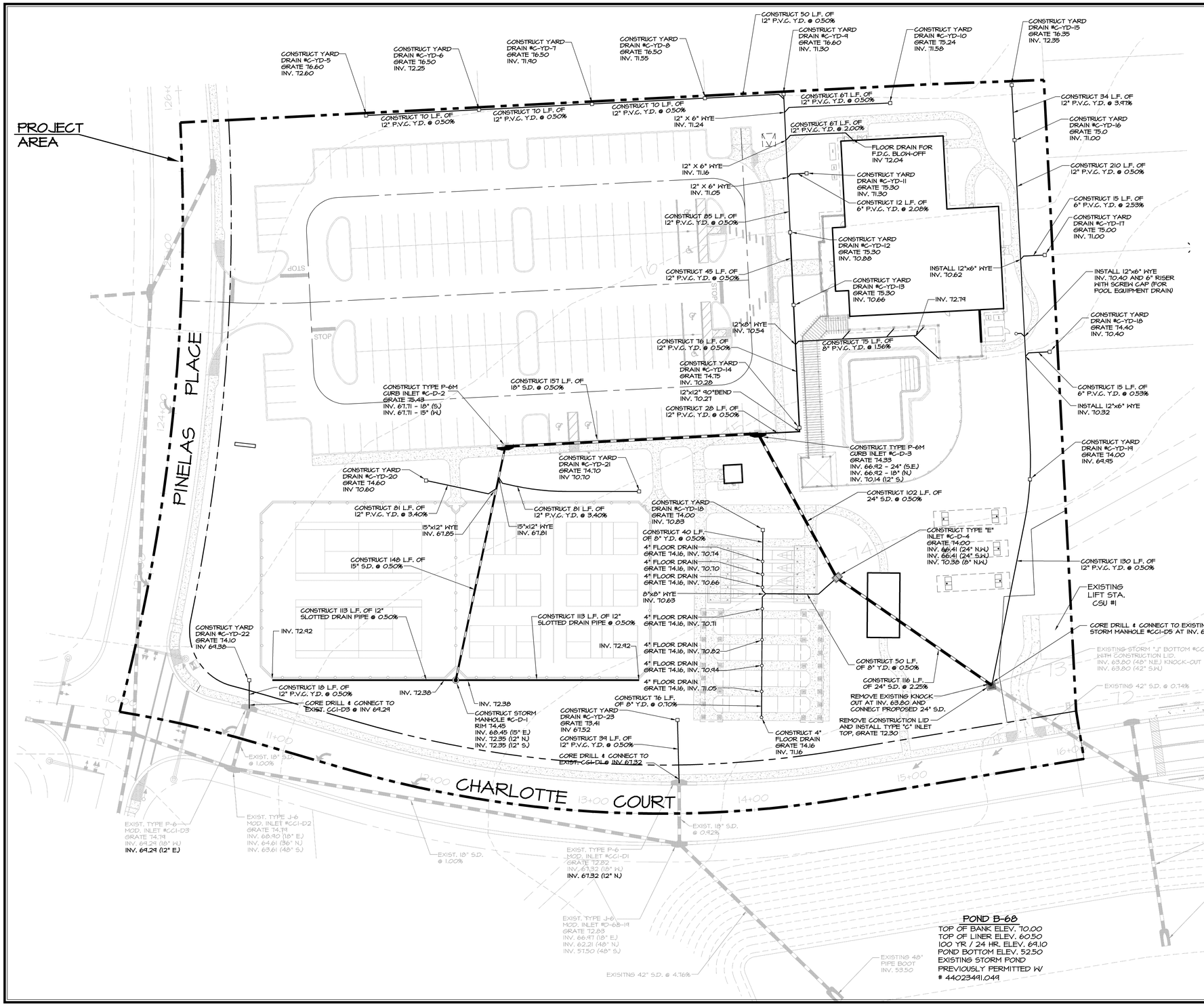

ROTATE 90°00'00"

30 15 0 30 60 90

SCALE IN FEET
1"=30'

LEGEND

- EXISTING STORM SEWER
- PROPOSED STORM SEWER
- EXISTING INLET
- PROPOSED INLET
- PROPOSED MANHOLE
- PROPOSED YARD DRAIN
- EXISTING CONTOUR LINE
- PROPOSED CONTOUR LINE
- B-D-# STRUCTURE NUMBER (PROPOSED)
- (#-D#) STRUCTURE NUMBER (EXISTING)

NOTE: DRAINAGE PIPING:
- (S.D.) STORM DRAINAGE PIPE
- (R.D.) ROOF DRAIN PIPE
- (Y.D.) YARD DRAIN PIPE

SHALL BE F.D.O.T. APPROVED AND OF ONE OF THE FOLLOWING MATERIALS:

- P.V.C. SDR35 OR A2000
- REINFORCED CONCRETE

DATE	REVISIONS	BY

FARNER BARLEY ▲ ENGINEERS ▲ SURVEYORS ▲ PLANNERS AND ASSOCIATES, INC.
Certificate of Authorization Number: 4709
4450 N.E. 83rd Road o Wildwood, Florida 34785 o (352) 748-3128

VILLAGES OF SUMTER
CAPTIVA VILLAGE RECREATION CENTER (SC 322-VR)

The Villages

STORM DRAINAGE PLAN

DATE 11-04-10
DRAWN BY MJC
CHKD BY JAH
FILE NAME STORMDNG
JOB NO. 421141.2023

SHT. 6 OF 7

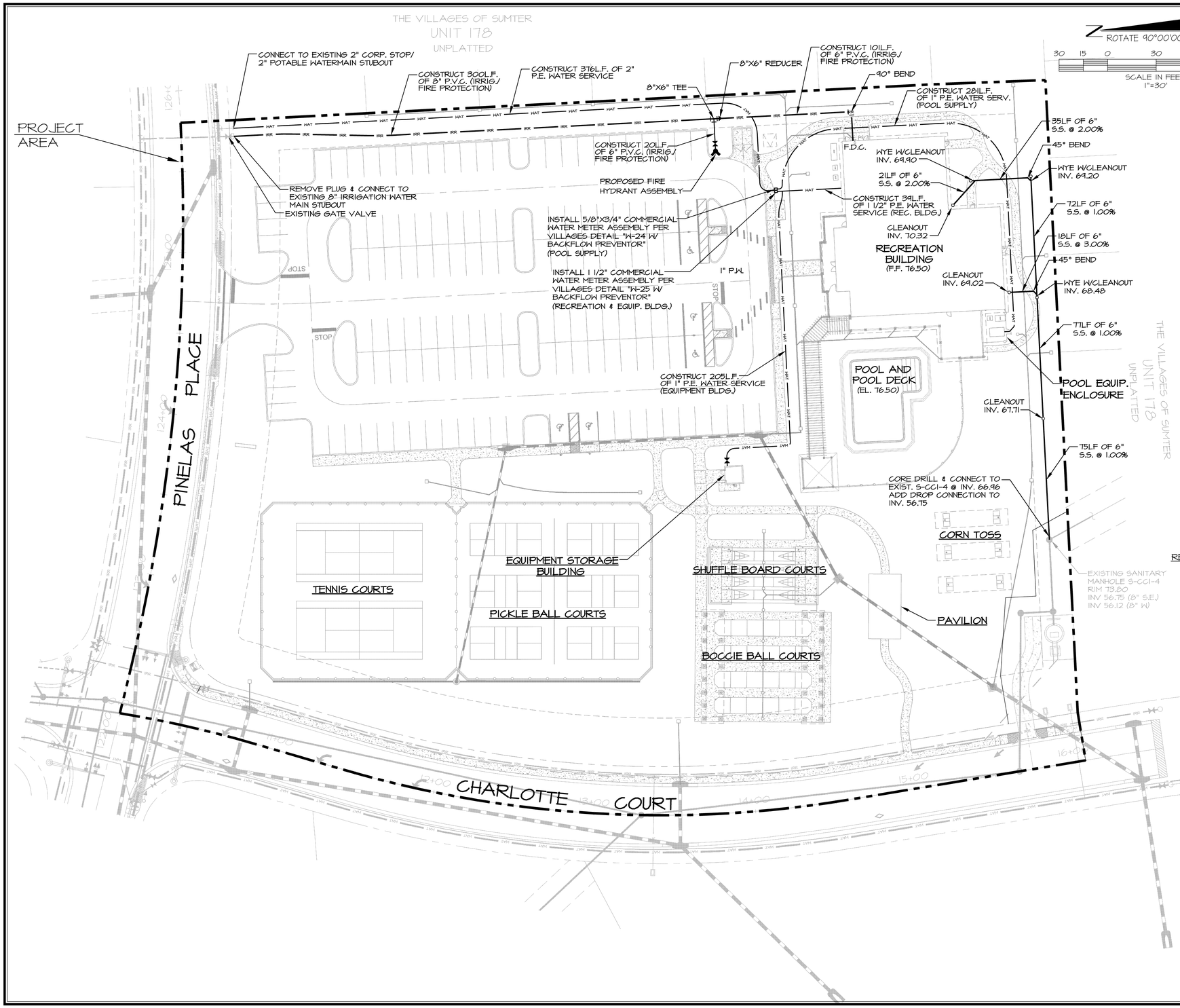

LEGEND

- EXISTING WATER MAIN
- PROPOSED WATER MAIN
- EXISTING VALVE
- PROPOSED VALVE
- EXISTING FIRE HYDRANT
- PROPOSED FIRE HYDRANT
- EXISTING SINGLE WATER SERVICE
- EXISTING DOUBLE WATER SERVICE
- PROPOSED SINGLE WATER SERVICE
- PROPOSED DOUBLE WATER SERVICE
- FIRE DEPARTMENT CONNECTION (F.D.C.)
- BACTERILOGICAL SAMPLE POINT
- EXISTING SANITARY SEWER
- PROPOSED SANITARY SEWER
- EXISTING MANHOLE
- PROPOSED MANHOLE
- MANHOLE NUMBER
- EXISTING DOUBLE SEWER SERVICE
- EXISTING SINGLE SEWER SERVICE
- PROPOSED DOUBLE SEWER SERVICE
- PROPOSED SINGLE SEWER SERVICE

NOTE:
IT IS THE RESPONSIBILITY OF THE SITE CONTRACTOR TO CONSTRUCT ALL WATER SERVICES, WATER AND FIRE MAINS, AND SANITARY SEWER TRUNKS AND LATERAL SERVICES AS SHOWN ON THESE PLANS TO WITHIN 5 FT OF THE EXTERIOR WALL OF EACH OF THE BUILDING STRUCTURES AS SHOWN ON THESE PLANS. IT IS THE RESPONSIBILITY OF THE SITE CONTRACTOR TO CONNECT PROPOSED FIRE MAINS AND WATER MAINS TO BACK FLOW PREVENTORS LOCATED INSIDE THE PROPOSED BUILDINGS. THE SITE CONTRACTOR WILL COORDINATE WITH ARCHITECT AND CIVIL ENGINEER TO VERIFY LOCATION AND SIZE OF BUILDING CONNECTIONS OF PROPOSED WATER, FIRE AND SANITARY SERVICES.

NOTE: MAINTAIN MIN. 1 FT. VERTICAL OR 6 FT. HORIZ. SEPARATION BETWEEN POTABLE AND NON-POTABLE WATER MAINS

CLEARANCE REQUIREMENTS
POTABLE WATER/ SANITARY, STORM SEWER RECLAIMED WATER AND NON-POTABLE IRRIGATION PIPING

VERTICAL SEPARATION: BETWEEN UNDERGROUND WATER MAINS AND SANITARY OR STORM SEWERS, WASTEWATER OR STORMWATER FORCE MAIN, RECLAIMED WATER PIPELINES.

1. NEW OR RELOCATED, UNDERGROUND WATER MAINS CROSSING ANY EXISTING OR PROPOSED GRAVITY-OR VACUUM-TYPE SANITARY SEWER OR STORM SEWER SHALL BE LAID SO THE OUTSIDE OF THE WATER MAIN IS AT LEAST SIX INCHES, AND PREFERABLY 12 INCHES, ABOVE OR AT LEAST 12 INCHES BELOW THE OUTSIDE OF THE OTHER PIPELINE. HOWEVER, IT IS PREFERABLE TO LAY THE WATER MAIN ABOVE THE OTHER PIPELINE.

2. NEW OR RELOCATED, UNDERGROUND WATER MAINS CROSSING ANY EXISTING OR PROPOSED PRESSURE-TYPE SANITARY SEWER, WASTEWATER OR STORMWATER FORCE MAIN, OR PIPELINE CONVEYING RECLAIMED WATER SHALL BE LAID SO THE OUTSIDE OF THE WATER MAIN IS AT LEAST 12 INCHES ABOVE OR BELOW THE OUTSIDE OF THE OTHER PIPELINE. HOWEVER, IT IS PREFERABLE TO LAY THE WATER MAIN ABOVE THE OTHER PIPELINE.

3. AT THE UTILITY CROSSINGS DESCRIBED IN PARAGRAPHS 1 AND 2 ABOVE, ONE FULL LENGTH OF WATER MAIN PIPE SHALL BE CENTERED ABOVE OR BELOW THE OTHER PIPELINE SO THE WATER MAIN JOINTS WILL BE AS FAR AS POSSIBLE FROM THE OTHER PIPELINE. ALTERNATIVELY, AT SUCH CROSSINGS, THE PIPES SHALL BE ARRANGED SO THAT ALL WATER MAIN JOINTS ARE AT LEAST THREE FEET FROM ALL JOINTS IN VACUUM-TYPE SANITARY SEWERS, STORMSEWERS, STORMWATER FORCE MAINS, OR PIPELINES CONVEYING RECLAIMED WATER REGULATED UNDER PART III OF CHAPTER 62-610, F.A.C. AND AT LEAST SIX FEET FROM ALL JOINTS IN GRAVITY-OR PRESSURE-TYPE SANITARY SEWERS, WASTEWATER FORCE MAINS, OR PIPELINES CONVEYING RECLAIMED WATER NOT REGULATED UNDER PART III OF CHAPTER 62-610, F.A.C.

4. SEPARATION BETWEEN WATER MAINS AND SANITARY OR STORM SEWER MANHOLES.

A. NO WATER MAIN SHALL PASS THROUGH, OR COME IN CONTACT WITH, ANY PART OF A SANITARY MANHOLE.
B. WATER MAINS SHALL NOT BE CONSTRUCTED OR ALTERED TO PASS THROUGH, OR COME INTO CONTACT WITH ANY PART OF A STORM SEWER MANHOLE OR INLET STRUCTURE.

5. WHERE AN UNDERGROUND WATER MAIN IS BEING LAID LESS THAN THREE FEET HORIZONTALLY FROM ANOTHER PIPELINE AND WHERE AN UNDERGROUND WATER MAIN IS CROSSING ANOTHER PIPELINE AND IS BEING LAID LESS THAN THE REQUIRED MINIMUM VERTICAL DISTANCE FROM THE OTHER PIPELINE:

A. USE OF PIPE, OR CASING PIPE, HAVING HIGH IMPACT STRENSTH (I.E., HAVING AN IMPACT STRENSTH AT LEAST EQUAL TO THAT OF 0.25-INCH-THICK DUCTILE IRON PIPE) OR CONCRETE ENCASEMENT AT LEAST FOUR INCHES THICK FOR THE WATER MAIN; AND
B. USE OF PIPE, OR CASING PIPE, HAVING HIGH IMPACT STRENSTH (I.E., HAVING AN IMPACT STRENSTH AT LEAST EQUAL TO THAT OF 0.25-INCH-THICK DUCTILE IRON PIPE) OR CONCRETE ENCASEMENT AT LEAST FOUR INCHEST THICK FOR THE OTHER PIPELINE IF IT IS NEW AND IS CONVEYING WASTEWATER OR RECLAIMED WATER.

HORIZONTAL SEPARATION: BETWEEN UNDERGROUND WATER MAINS AND SANITARY OR STORM SEWERS, WASTEWATER OR STORMWATER FORCE MAIN, RECLAIMED WATER PIPELINES, AND ON-SITE SEWAGE TREATMENT AND DISPOSAL SYSTEMS.

1. NEW OR RELOCATED, UNDERGROUND WATER MAINS SHALL BE LAID TO PROVIDE A HORIZONTAL DISTANCE OF AT LEAST THREE FEET BETWEEN THE OUTSIDE OF THE WATERMAIN AND THE OUTSIDE OF ANY EXISTING OR PROPOSED STORM SEWER, STORMWATER FORCE MAIN, OR PIPELINE CONVEYING RECLAIMED WATER REGULATED UNDER PART III OF CHAPTER 62-610, F.A.C.

2. NEW OR RELOCATED, UNDERGROUND WATER MAINS SHALL BE LAID TO PROVIDE HORIZONTAL DISTANCE OF AT LEAST THREE FEET, AND PREFERABLY TEN FEET, BETWEEN THE OUTSIDE OF THE WATER MAIN AND THE OUTSIDE OF ANY EXISTING OR PROPOSED VACUUM-TYPE SANITARY SEWER.

3. NEW OR RELOCATED, UNDERGROUND WATER MAINS SHALL BE LAID TO PROVIDE A HORIZONTAL DISTANCE OF AT LEAST SIX FEET, AND PREFERABLY TEN FEET, BETWEEN THE OUTSIDE OF THE WATER MAIN AND THE OUTSIDE OF ANY EXISTING OR PROPOSED GRAVITY-OR PRESSURE-TYPE SANITARY SEWER, WASTEWATER FORCE MAIN, OR PIPELINE CONVEYING RECLAIMED WATER NOT REGULATED UNDER PARTIII OF CHAPTER 62-610, F.A.C.. THE MINIMUM HORIZONTAL SEPARATION DISTANCE BETWEEN WATER MAINS AND GRAVITY-TYPE SANITARY SEWERS SHALL BE REDUCED TO THREE FEET WHERE THE BOTTOM OF THE WATER MAIN IS LAID AT LEAST SIX INCHES ABOVE THE TOP OF THE SEWER.

4. NEW OR RELOCATED, UNDERGROUND WATER MAINS SHALL BE LAID TO PROVIDE A HORIZONTAL DISTANCE OF AT LEAST TEN FEET BETWEEN THE OUTSIDE OF THE WATER MAIN AND ALL PARTS OF ANY EXISTING OR PROPOSED "ON-SITE SEWAGE TREATMENT AND DISPOSAL SYSTEM" AS DEFINED IN SECTION 381.0065(2), F.S., AND RULE 64E-6.002, F.A.C.

5. WHERE AN UNDERGROUND WATER MAIN IS BEING LAID LESS THAN THE REQUIRED MINIMUM HORIZONTAL DISTANCE FROM ANOTHER PIPELINE AND WHERE AN UNDERGROUND WATER MAIN IS CROSSING ANOTHER PIPELINE AND JOINTS IN THE WATER MAIN ARE BEING LOCATED LESS THAN THE REQUIRED MINIMUM DISTANCE FROM JOINTS IN OTHER PIPELINE:

A. USE OF PRESSURE-RATED PIPE CONFORMING TO THE AMERICAN WATER WORKS ASSOCIATION STANDARDS INCORPORATED INTO RULE 62-555.330, F.A.C., FOR THE OTHER PIPELINE IF IT IS GRAVITY-OR VACUUM-TYPE PIPELINE;
B. USE WELDED, FUSED OR OTHERWISE RESTRAINED JOINTS FOR EITHER WATER MAIN OR THE OTHER PIPELINE; OR
C. USE OF WATERTIGHT CASING PIPE OR CONCRETE ENCASEMENT AT LEAST FOUR INCHES THICK FOR EITHER THE WATER MAIN OR THE OTHER PIPELINE.

DATE	REVISIONS	BY

FARNER BARLEY AND ASSOCIATES, INC.
ENGINEERS ▲ SURVEYORS ▲ PLANNERS
Certificate of Authorization Number: 4709
4450 N.E. 83rd Road ○ Wildwood, Florida 34785 ○ (352) 748-3128

VILLAGES OF LAKE-SUMTER, INC.
CAPTIVA VILLAGE RECREATION CENTER (SC 322-VR)

WATER DISTRIBUTION AND SANITARY SEWER PLAN

DATE 11-04-10
DRAWN BY MJC
CHKD BY JAH
FILE NAME UTL.DWG
JOB NO. 421141.2023

SHT. 7 OF 7

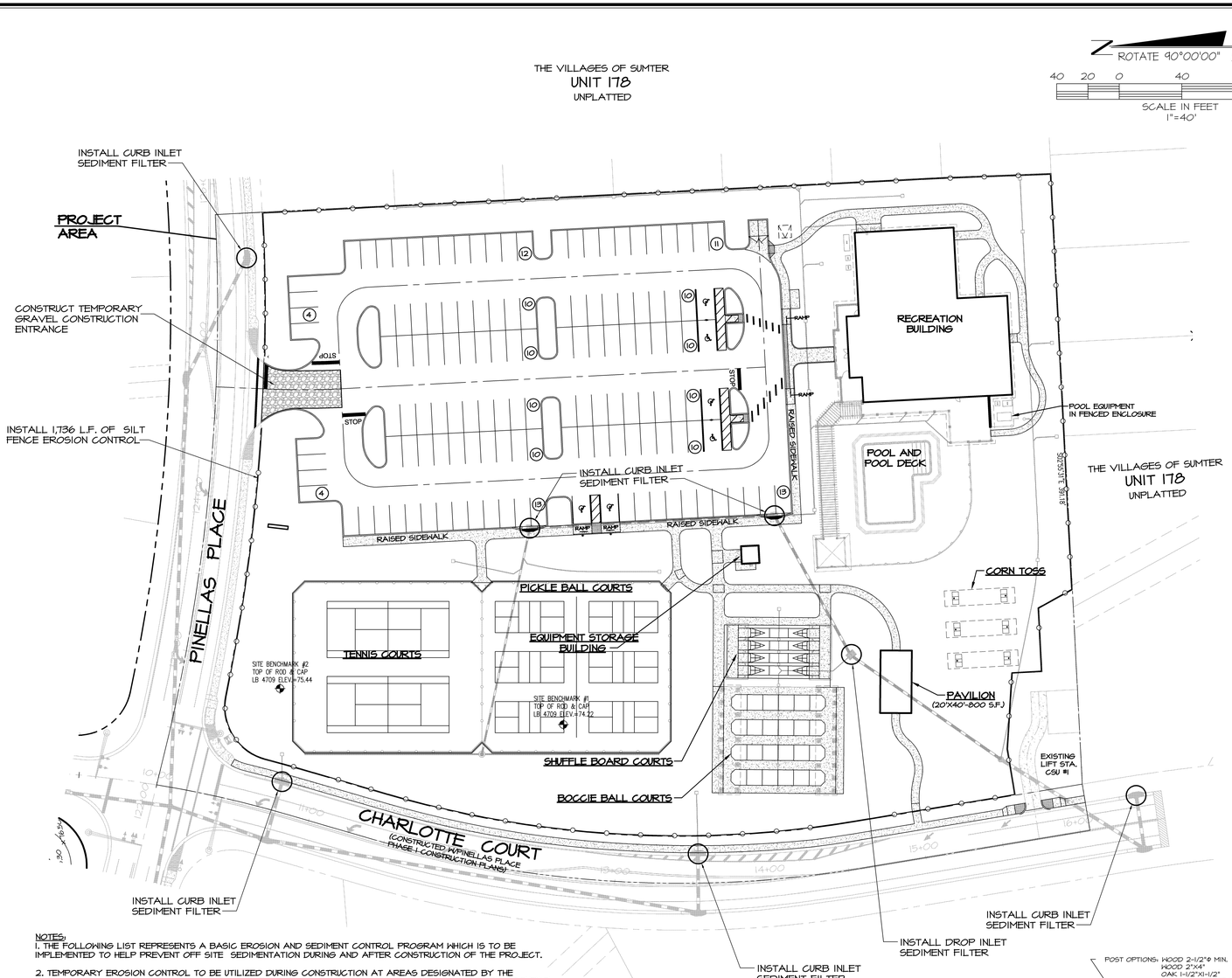

NOTES:
1. THE FOLLOWING LIST REPRESENTS A BASIC EROSION AND SEDIMENT CONTROL PROGRAM WHICH IS TO BE IMPLEMENTED TO HELP PREVENT OFF SITE SEDIMENTATION DURING AND AFTER CONSTRUCTION OF THE PROJECT.

2. TEMPORARY EROSION CONTROL TO BE UTILIZED DURING CONSTRUCTION AT AREAS DESIGNATED BY THE ENGINEER OR AREAS ON SITE WHERE UNSTABILIZED GRADES MAY CAUSE EROSION PROBLEMS. EROSION CONTROL MAY BE REMOVED AFTER UPSLOPE AREA HAS BEEN STABILIZED BY SOD, OR COMPACTED AS DETERMINED BY THE OWNER.

3. PERMANENT EROSION AND SEDIMENT CONTROL MEASURES SHALL BE INSTALLED AT THE EARLIEST PRACTICAL TIME CONSISTENT WITH GOOD CONSTRUCTION PRACTICES. ONE OF THE FIRST CONSTRUCTION ACTIVITIES SHOULD BE THE PLACEMENT OF PERMANENT AND TEMPORARY EROSION AND SEDIMENT CONTROL MEASURES AROUND THE PERIMETER OF THE PROJECT OR THE INITIAL WORK AREA TO PROTECT THE PROJECT, ADJACENT PROPERTIES AND WATER RESOURCES.

4. TEMPORARY EROSION AND SEDIMENT CONTROL MEASURES SHALL BE COORDINATED WITH PERMANENT MEASURES TO ASSURE ECONOMICAL, EFFECTIVE AND CONTINUOUS CONTROL THROUGHOUT THE CONSTRUCTION PHASE. TEMPORARY MEASURES SHALL NOT BE CONSTRUCTED FOR EXPEDIENCY IN LIEU OF PERMANENT MEASURES.

5. EROSION AND SEDIMENT CONTROL MEASURES SHALL BE ADEQUATELY MAINTAINED TO PERFORM THEIR INTENDED FUNCTION DURING CONSTRUCTION OF THE PROJECT.

6. NECESSARY REPAIRS TO BARRIERS OR REPLACEMENT OF BARRIERS SHALL BE ACCOMPLISHED PROMPTLY.

7. SEDIMENT DEPOSITS SHOULD BE REMOVED AFTER EACH RAINFALL. THEY MUST BE REMOVED WHEN THE LEVEL OF DEPOSITION REACHES APPROXIMATELY ONE HALF THE HEIGHT OF THE BARRIER.

8. MATERIAL FROM SEDIMENT TRAPS SHALL NOT BE STOCKPILED OR DISPOSED OF IN A MANNER WHICH MAKES THEM READILY SUSCEPTIBLE TO BEING WASHED INTO ANY WATERCOURSE BY RUNOFF OR HIGH WATER.

9. ANY SEDIMENT DEPOSITS REMAINING IN PLACE AFTER THE BARRIERS ARE NO LONGER REQUIRED SHALL BE DRESSED TO CONFORM TO THE EXISTING GRADE, PREPARED AND SEEDED.

10. SILT FENCE TO BE PAID FOR UNDER THE CONTRACT UNIT PRICE FOR STAKED SILT FENCE (LF).

11. SILT FENCE TO REMAIN IN PLACE UNTIL FINISH GRADING FOR THE LANDSCAPING IS UNDER WAY.

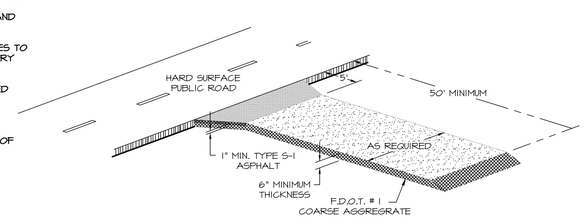

GRAVEL CONSTRUCTION ENTRANCE
N.T.S.

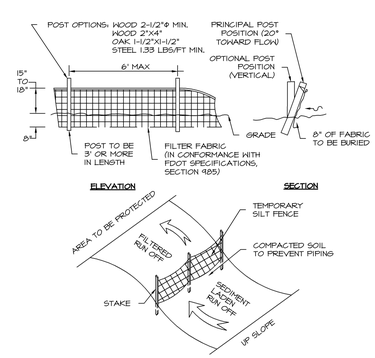

FLORIDA DOT TYPE III SILT FENCE AND EROSION CONTROL
N.T.S.

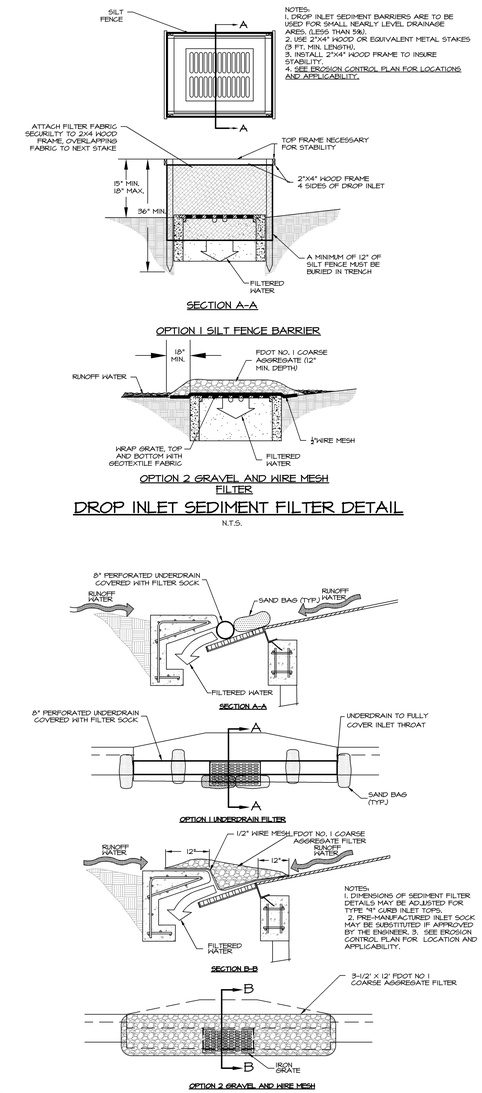

DROP INLET SEDIMENT FILTER DETAIL
N.T.S.

CURB INLET SEDIMENT FILTER DETAIL
N.T.S.

NOTE:
THE EROSION CONTROL MEASURES SHOWN ON THIS PLAN ARE, IN THE OPINION OF THE ENGINEER, THE MINIMUM THAT MAY BE REQUIRED. ACTUAL FIELD CONDITIONS MAY REQUIRE EITHER ADDITIONAL OR REDUCED EROSION CONTROL MEASURES TO BE IMPLEMENTED. THE CONTRACTOR IS DIRECTED TO FOLLOW STANDARD BEST MANAGEMENT PRACTICES IN IMPLEMENTING A SUCCESSFUL EROSION CONTROL PLAN.

BRETT J. TOBIAS, P.E.
REGISTERED ENGINEER NO. 69017
STATE OF FLORIDA

JOHN R. GRANT
VICE PRESIDENT
THE VILLAGES OF LAKE-SUMTER, INC.

DATE	REVISIONS	BY

FARNER BARLEY AND ASSOCIATES, INC.
▲ ENGINEERS ▲ SURVEYORS ▲ PLANNERS
Certificate of Authorization Number: 4709
4450 N.E. 83rd Road ○ Wildwood, Florida 34785 ○ (352) 748-3126

The Villages Designer

VILLAGES OF SUMTER
CAPTIVA VILLAGE RECREATION CENTER (SC 322-VR)

EROSION CONTROL PLAN

DATE 11-24-10
DRAWN BY MJC
CHKD BY JAH
FILE NAME EROSIONDWG
JOB NO. 921141.2023

SHT. EC-1 OF EC-1