DATE	ISSUE	BY

The Villages®

PRELIMINARY/ENGINEERING PLANS FOR THE VILLAGES OF SUMTER UNIT NO. 196

DESIGN SPEED = 30 M.P.H.

SECTION 11 AND 12,
TOWNSHIP 19 SOUTH, RANGE 23 EAST
SUMTER COUNTY, FLORIDA

LEGAL DESCRIPTION

UNIT NO. 196:
A PARCEL OF LAND BEING PORTIONS OF SECTION 11 AND 12, TOWNSHIP 19 SOUTH, RANGE 23 EAST SUMTER COUNTY, FLORIDA, BEING DESCRIBED AS FOLLOWS:

COMMENCE AT THE SOUTHEAST CORNER OF THE NORTHEAST 1/4 OF SAID SECTION 11; THENCE N00°36'36"E, ALONG THE EAST LINE OF SAID NORTHEAST 1/4 A DISTANCE OF 154.01 FEET; THENCE DEPARTING SAID EAST LINE N86°00'13"E, 350.91 FEET; THENCE N26°05'51"E, 66.09 FEET TO THE POINT OF BEGINNING; THENCE N72°15'32"W, 469.29 FEET; THENCE N74°15'58" W, 59.35 FEET; THENCE N78°46'25" W, 58.84 FEET; THENCE N83°16'07"W, 58.81 FEET; THENCE N03°51'48"E, 142.52 FEET TO A POINT ON A CURVE CONCAVE SOUTHERLY AND HAVING A RADIUS OF 775.00 FEET TO WHICH A RADIAL LINE BEARS N03°51'48"E; THENCE RUN EASTERLY 13.32 FEET ALONG THE ARC THEREOF THROUGH A CENTRAL ANGLE OF 00°59'06"; THENCE DEPARTING SAID CURVE ALONG A NON-TANGENT LINE RUN N10°39'05"W, 73.03 FEET; THENCE N18°29'42"W, 58.84 FEET; THENCE N22°00'31"W, 59.81 FEET; THENCE N30°50'27"W, 121.44 FEET; THENCE N42°50'02"W, 60.09 FEET; THENCE N37°27'58"W, 61.05 FEET; THENCE N28°11'27"W, 60.82 FEET; THENCE N18°11'11"W, 30.37 FEET; THENCE N40°49'41"E, 110.71 FEET; THENCE N36°59'20"E, 55.25 FEET; THENCE N06°14'22"E, 116.37 FEET; THENCE S89°23'24"E, 233.12 FEET; THENCE N82°18'09"E, 52.28 FEET; THENCE N50°44'30"E, 55.48 FEET; THENCE N38°02'25"E, 58.31 FEET; THENCE N29°58'27"E, 57.17 FEET; THENCE N01°24'18"E, 57.75 FEET; THENCE N01°23'56"W, 64.60 FEET; THENCE N00°30'42"W, 120.00 FEET; THENCE N00°14'59"W, 54.64 FEET; THENCE N12°44'04"W, 25.55 FEET; THENCE N10°03'47"W, 111.91 FEET; THENCE N01°52'00"W, 427.26 FEET; THENCE S89°47'15"E, 425.41 FEET; THENCE S65°07'30"E, 96.63 FEET; THENCE S25°46'44"E, 484.43 FEET; THENCE S14°03'29"E, 102.86 FEET; THENCE S04°45'01"E, 71.69 FEET; THENCE S00°30'42"E, 69.65 FEET; THENCE S60°48'52"E, 205.24 FEET; THENCE S31°53'15"W, 294.31 FEET; THENCE S42°36'22"E, 133.70 FEET; THENCE S57°45'02"E, 73.44 FEET; THENCE S32°14'58"W, 329.66 FEET TO THE POINT OF CURVATURE OF A CURVE CONCAVE NORTHWEST AND HAVING A RADIUS OF 670.00 FEET; THENCE SOUTHWESTERLY ALONG THE ARC OF SAID CURVE THROUGH A CENTRAL ANGLE OF 13°10'46", AN ARC DISTANCE OF 154.12 FEET TO THE POINT OF TANGENCY; THENCE S45°25'45"W, 52.55 FEET TO THE POINT OF CURVATURE OF A CURVE CONCAVE SOUTHEAST AND HAVING A RADIUS OF 1,230.00 FEET; THENCE SOUTHWESTERLY ALONG THE ARC OF SAID CURVE THROUGH A CENTRAL ANGLE OF 19°19'54", AN ARC DISTANCE OF 415.00 FEET TO THE POINT OF TANGENCY; THENCE S26°05'51"W, 111.91 FEET; THENCE S86°00'13"W, 350.91 FEET TO THE POINT OF BEGINNING.

CONTAINING 38.11 ACRES, MORE OR LESS.

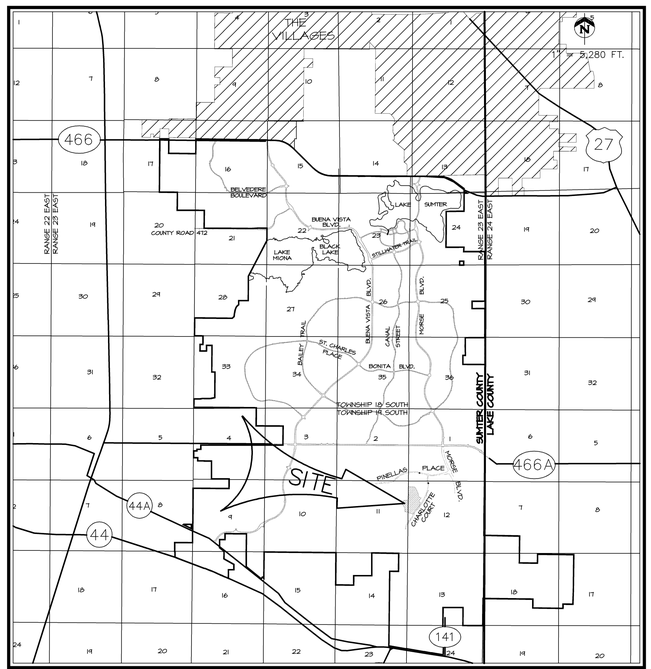

VICINITY MAP

INDEX OF SHEETS

1. TITLE SHEET
2. MASTER DEVELOPMENT PLAN
3. SITE GEOMETRY, SIGNING & MARKING, & SHEET INDEX
4. STORM DRAINAGE MASTER PLAN
5. SANITARY SEWER MASTER PLAN
6. WATER DISTRIBUTION MASTER PLAN
7. IRRIGATION DISTRIBUTION MASTER PLAN
8. PLAN & PROFILE - OLDSMAR TERRACE
9.-10. PLAN & PROFILE - ENISGROVE WAY
11.-14. PLAN & PROFILE - MAYFLOWER LOOP
15. PLAN & PROFILE - ULELAH STREET & NEWBRIDGE PLACE
16. PLAN & PROFILE - STYLEWOOD AVENUE
17. PLAN & PROFILE - MAYBERRY COURT & QUAINT COURT
18.-19. MASTER GRADING PLAN
LS-1. LIFT STATION SITE PLAN/DETAILS
EC-1. EROSION CONTROL PLAN
~~UT-1. UTILITY TRENCHING PLAN~~

THE STANDARD DETAILS FOR THIS PROJECT SHALL BE FOUND IN "THE VILLAGES CONSTRUCTION DETAILS MANUAL, DATED MAY 1, 2009", PREPARED BY GRANT & DZURO, OR AS AMENDED BY THESE PLANS. (SWFWMD PERMIT #44024899.081)

NOTE: ELEVATIONS SHOWN ARE BASED ON THE VILLAGES DATUM. TO OBTAIN N.G.V.D. ADD 3.46 FEET.

OWNER/DEVELOPER:
THE VILLAGES OF LAKE-SUMTER, INC.
990 OLD MILL RUN
VILLAGES, FL. 32162
JOHN R. GRANT, VICE PRESIDENT

ENGINEER/SURVEYOR:
FARNER, BARLEY AND ASSOCIATES, INC.
4450 N.E. 83rd ROAD
WILDWOOD, FL 34785
JEFFREY A. HEAD, P.E.
FLA. LIC. #58058

FARNER BARLEY AND ASSOCIATES, INC.
▲ ENGINEERS
▲ SURVEYORS
▲ PLANNERS
CERTIFICATE OF AUTHORIZATION NUMBER: 4709
4450 N.E. 83rd Road ○ Wildwood, Florida 34785 ○ (352) 748-3126

DATE	REVISIONS	BY

FARNER BARLEY AND ASSOCIATES, INC.
ENGINEERS ▲ SURVEYORS ▲ PLANNERS
Certificate of Authorization Number: 4709
4450 N.E. 83rd Road ○ Wildwood, Florida 34785 ○ (352) 748-3128

The Villages

VILLAGES OF SUMTER
UNIT No. 196

MASTER DEVELOPMENT PLAN

DATE 10-13-10
DRAWN BY MJC
CHKD BY JAH
FILE NAME 196-MDEV
JOB NO. 921141.1925

SHT. 2 OF 19

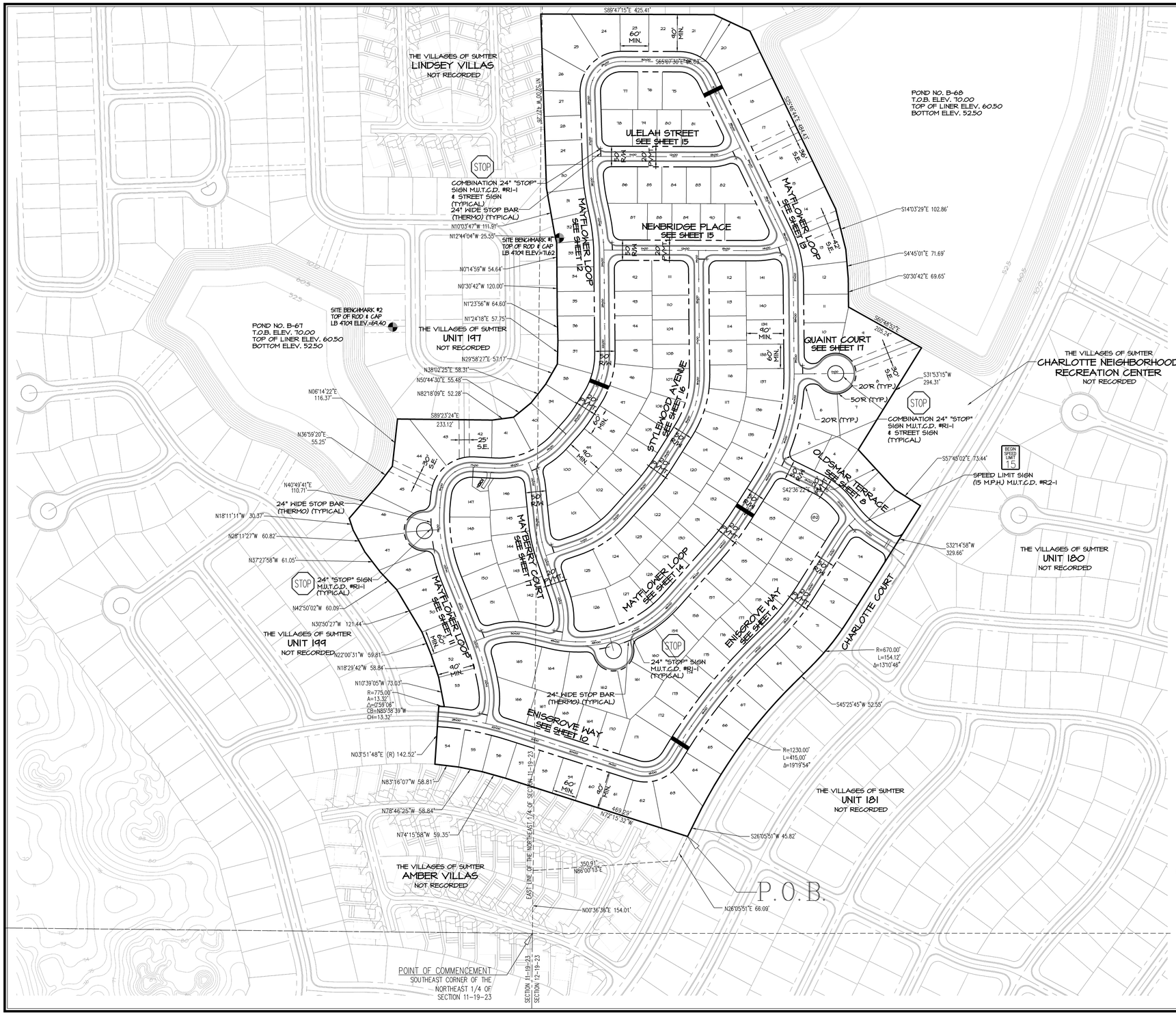

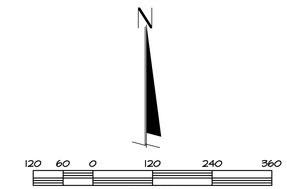

SITE DATA	
TOTAL ACRES	38.11 AC.
NUMBER OF UNITS	182
EXISTING ZONING	PUD
DENSITY (DU/AC)*	4.78 DU/AC
LENGTH OF ROADWAY INTERNAL TO UNIT	7,210 L.F.
MINIMUM LOT DIMENSION	60' x 90'
WATER & SEWER SUPPLIED BY	C.S.U.
IRRIGATION SUPPLIED BY	SUMTER WATER CONSERVATION AUTHORITY
ELECTRIC SUPPLIED BY	S.E.C.O.

EASEMENT LEGEND

E.E. = INDICATES EMERGENCY EASEMENT FOR INGRESS AND EGRESS BY PROVIDERS OF FIRE, LAW ENFORCEMENT, AND EMERGENCY MEDICAL SERVICES, THEIR VEHICLES AND PERSONNEL.

S.E. = INDICATES SPECIAL EASEMENT FOR LANDSCAPING AND/OR THE CONSTRUCTION, INSTALLATION, MAINTENANCE AND OPERATION OF WATER, SANITARY SEWER, ELECTRIC, TELEPHONE, GAS OR OTHER PUBLIC UTILITIES AND/OR DRAINAGE FACILITIES AND/OR WALL FENCING AND/OR GOLF CART PATHS.

SITE NOTES FOR UNIT 196

OWNER-DEVELOPER - THE VILLAGES OF LAKE-SUMTER, INC.
1440 OLD MILL RUN
THE VILLAGES, FLORIDA 32162

BUILDING SETBACKS = 0' SIDE YARD, 0' REAR YARD, 20' FRONT YARD. 10' BUILDING SEPARATION.

STREET LIGHTING TO BE INSTALLED BY UTILITY COMPANY. SINGLE FIXTURE LIGHTS GENERALLY LOCATED AT INTERSECTION, CUL-DE-SAC & ALONG THE ROADWAYS WITH AN APPROXIMATE SPACING BETWEEN LIGHTS BEING 300'.

LOCATED IN SECTION 11 & 12, TOWNSHIP 19 SOUTH, RANGE 23 EAST, SUMTER COUNTY, FLORIDA.

NO LOTS ARE LOCATED WITHIN THE 100 YEAR FLOOD ZONE.

ALL STREETS TO BE CONSTRUCTED BY THE DEVELOPER AND MAINTAINED BY SUMTER COUNTY.

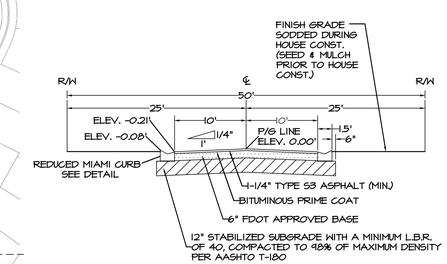

DESIGN SPEED = 30 M.P.H.

TYPICAL SUBDIVISION ROADWAY

50 FOOT RIGHT-OF-WAY

NO SCALE

NOTE: SITE TO BE SEED & MULCHED PRIOR TO HOUSE CONSTRUCTION.

DATE	REVISIONS	BY

FARNER BARLEY AND ASSOCIATES, INC.
ENGINEERS ▲ SURVEYORS ▲ PLANNERS
Certificate of Authorization Number: 4709
4450 N.E. 83rd Road O Wildwood, Florida 34785 O (352) 748-3128

VILLAGES OF SUMTER
UNIT 196

SITE GEOMETRY, SIGNING & MARKING, INDEX OF SHEETS

DATE 10-13-10
DRAWN BY MJC
CHKD BY JAH
FILE NAME 196-INDEX
JOB NO. 921141.1985

SHT. 3 OF 19

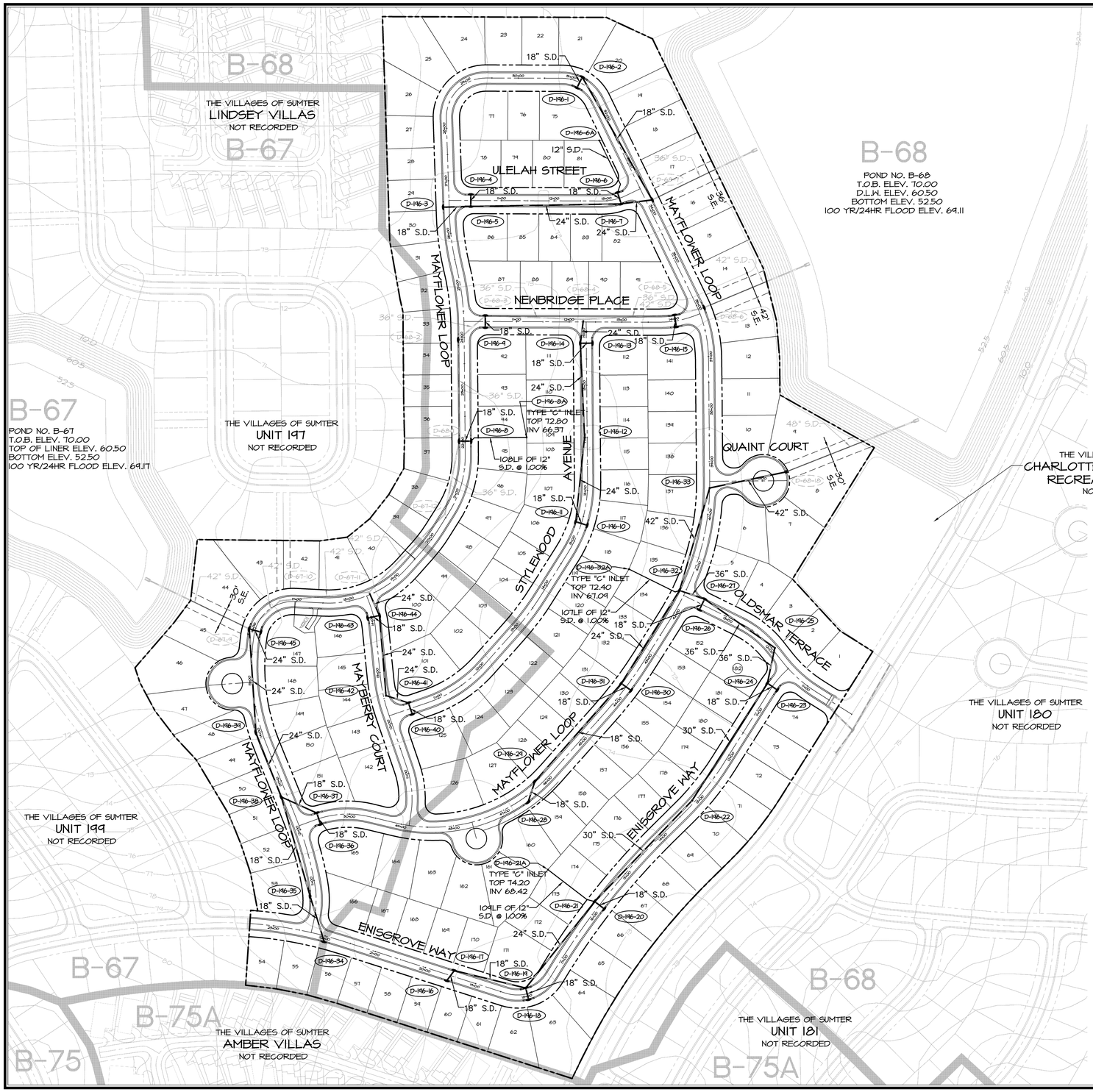

N

100 50 0 100 200 300

SCALE IN FEET
1"=100'

STORM DRAIN PIPE SPECIFICATIONS

STORM DRAIN PIPE IS REQUIRED TO COMPLY WITH THE FOLLOWING STANDARDS:

1. ROAD CROSS-DRAIN PIPE.
   A. ACCEPTABLE TYPES-REINFORCED CONCRETE, A2000, CORRUGATED ALUMINUM, HDPE OR OTHER FDOT APPROVED MATERIALS. PVC SHALL BE AS APPROVED IN THE 2008 EDITION OF THE FDOT STANDARD SPECIFICATIONS
   B. MINIMUM SIZE--EIGHTEEN (18) INCHES DIAMETER OR EQUAL.
   C. ENDWALL, INLET MANHOLE OR MITERED END SECTION WITH CONCRETE COLLAR REQUIRED AT EACH END.
2. ROADSIDE DRAIN PIPE:
   A. ACCEPTABLE TYPES--REINFORCED CONCRETE, A2000, CORRUGATED ALUMINUM, HDPE OR OTHER FDOT APPROVED MATERIALS. PVC SHALL BE AS APPROVED IN THE 2008 EDITION OF THE FDOT STANDARD SPECIFICATIONS
   B. MINIMUM SIZE--FIFTEEN (15) INCHES DIAMETER OR EQUAL.
3. STORM SEWER PIPE:
   A. ACCEPTABLE TYPES--REINFORCED CONCRETE, A2000, CORRUGATED ALUMINUM, HDPE OR OTHER FDOT APPROVED MATERIALS. PVC SHALL BE AS APPROVED IN THE 2008 EDITION OF THE FDOT STANDARD SPECIFICATIONS
   B. MINIMUM SIZE--EIGHTEEN (18) INCHES OR EQUAL.
   C. INLET OR MANHOLE REQUIRED AT EACH CHANGE OF ALIGNMENT OR GRADE.
4. FINAL AS-BUILT DRAWINGS WILL SPECIFY WHAT TYPE OF STORMPIPE MATERIAL WAS USED.

NOTES:

1. IF ADJACENT SYSTEMS ARE EXISTING, CONNECTION POINTS WILL BE EXISTING STRUCTURES WITH APPROPRIATE KNOCK-OUTS LEFT IN THEM.
2. IF ADJACENT SYSTEMS ARE NOT EXISTING, CONNECTING STRUCTURES WILL BE BUILT WITH THIS PROJECT AND APPROPRIATE KNOCK-OUTS FOR FUTURE CONNECTIONS WILL BE LEFT.

STORM DRAIN LEGEND

PROPOSED		EXISTING
SD	STORM DRAIN	SD
	INLET	
	MANHOLE	
	MITRED END SECTION	
	YARDDRAIN	
15"x12"	REDUCER (SIZE)	15"x12"
76	CONTOUR	76
	FLOW ARROW	
D-CH5	STRUCTURE NUMBER	D-CH5

DATE	REVISIONS	BY

FARNER BARLEY AND ASSOCIATES, INC.
ENGINEERS ▲ SURVEYORS ▲ PLANNERS
Certificate of Authorization Number: 4709
4450 N.E. 83rd Road ○ Wildwood, Florida 34785 ○ (352) 748-3128

The Villages

VILLAGES OF SUMTER
UNIT 196

STORM DRAINAGE MASTER PLAN

DATE 10-14-10
DRAWN BY MJC
CHKD BY JAH
FILE NAME 196-STORM
JOB NO. 921141.1925

SHT. 4 OF 19

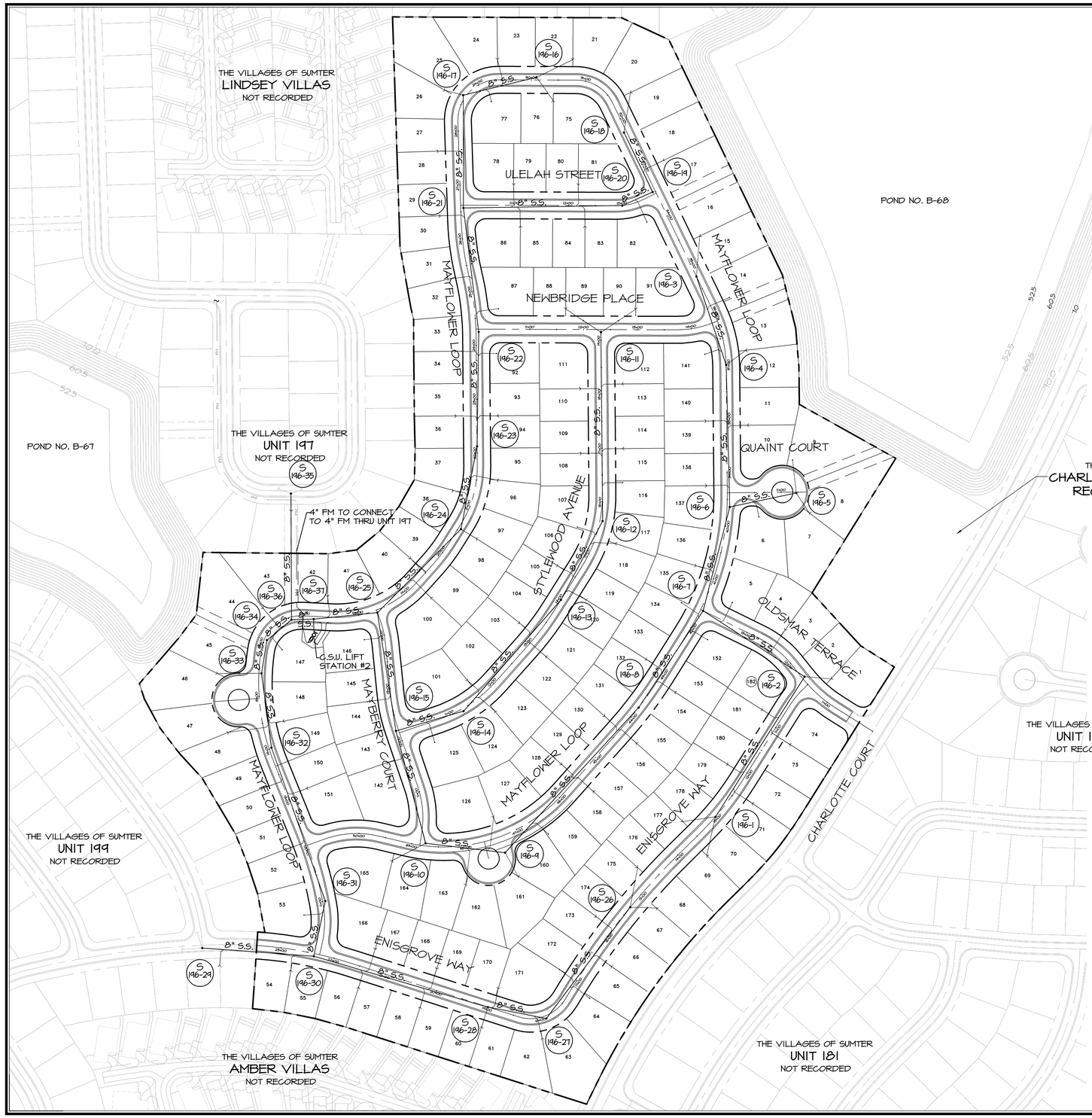

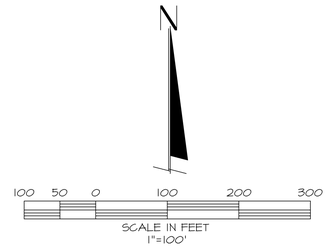

CLEARANCE REQUIREMENTS
POTABLE WATER/ SANITARY, STORM SEWER
RECLAIMED WATER AND NON-POTABLE IRRIGATION PIPING

VERTICAL SEPARATION: BETWEEN UNDERGROUND WATER MAINS AND SANITARY OR STORM SEWERS, WASTEWATER OR STORMWATER FORCE MAIN, RECLAIMED WATER PIPELINES.

1. NEW OR RELOCATED, UNDERGROUND WATER MAINS CROSSING ANY EXISTING OR PROPOSED GRAVITY-OR VACUUM-TYPE SANITARY SEWER OR STORM SEWER SHALL BE LAID SO THE OUTSIDE OF THE WATER MAIN IS AT LEAST SIX INCHES, AND PREFERABLY 12 INCHES, ABOVE OR AT LEAST 12 INCHES BELOW THE OUTSIDE OF THE OTHER PIPELINE. HOWEVER, IT IS PREFERABLE TO LAY THE WATER MAIN ABOVE THE OTHER PIPELINE.

2. NEW OR RELOCATED, UNDERGROUND WATER MAINS CROSSING ANY EXISTING OR PROPOSED PRESSURE-TYPE SANITARY SEWER, WASTEWATER OR STORMWATER FORCE MAIN, OR PIPELINE CONVEYING RECLAIMED WATER SHALL BE LAID SO THE OUTSIDE OF THE WATER MAIN IS AT LEAST 12 INCHES ABOVE OR BELOW THE OUTSIDE OF THE OTHER PIPELINE. HOWEVER, IT IS PREFERABLE TO LAY THE WATER MAIN ABOVE THE OTHER PIPELINE.

3. AT THE UTILITY CROSSINGS DESCRIBED IN PARAGRAPHS 1 AND 2 ABOVE, ONE FULL LENGTH OF WATER MAIN PIPE SHALL BE CENTERED ABOVE OR BELOW THE OTHER PIPELINE SO THE WATER MAIN JOINTS WILL BE AS FAR AS POSSIBLE FROM THE OTHER PIPELINE. ALTERNATIVELY, AT SUCH CROSSINGS, THE PIPES SHALL BE ARRANGED SO THAT ALL WATER MAIN JOINTS ARE AT LEAST THREE FEET FROM ALL JOINTS IN VACUUM-TYPE SANITARY SEWERS, STORMSEWERS, STORMWATER FORCE MAINS, OR PIPELINES CONVEYING RECLAIMED WATER REGULATED UNDER PART III OF CHAPTER 62-610, F.A.C. AND AT LEAST SIX FEET FROM ALL JOINTS IN GRAVITY-OR PRESSURE-TYPE SANITARY SEWERS, WASTEWATER FORCE MAINS, OR PIPELINES CONVEYING RECLAIMED WATER NOT REGULATED UNDER PART III OF CHAPTER 62-610, F.A.C.

4. SEPARATION BETWEEN WATER MAINS AND SANITARY OR STORM SEWER MANHOLES.
A. NO WATER MAIN SHALL PASS THROUGH, OR COME IN CONTACT WITH, ANY PART OF A SANITARY MANHOLE.
B. WATER MAINS SHALL NOT BE CONSTRUCTED OR ALTERED TO PASS THROUGH, OR COME INTO CONTACT WITH ANY PART OF A STORM SEWER MANHOLE OR INLET STRUCTURE.

5. WHERE AN UNDERGROUND WATER MAIN IS BEING LAID LESS THAN THREE FEET HORIZONTALLY FROM ANOTHER PIPELINE AND WHERE AN UNDERGROUND WATER MAIN IS CROSSING ANOTHER PIPELINE AND IS BEING LAID LESS THAN THE REQUIRED MINIMUM VERTICAL DISTANCE FROM THE OTHER PIPELINE:
A. USE OF PIPE, OR CASING PIPE, HAVING HIGH IMPACT STRENGTH (I.E., HAVING AN IMPACT STRENGTH AT LEAST EQUAL TO THAT OF 0.25-INCH-THICK DUCTILE IRON PIPE) OR CONCRETE ENCASEMENT AT LEAST FOUR INCHES THICK FOR THE WATER MAIN. AND
B. USE OF PIPE, OR CASING PIPE, HAVING HIGH IMPACT STRENGTH (I.E., HAVING AN IMPACT STRENGTH AT LEAST EQUAL TO THAT OF 0.25-INCH-THICK DUCTILE IRON PIPE) OR CONCRETE ENCASEMENT AT LEAST FOUR INCHEST THICK FOR THE OTHER PIPELINE IF IT IS NEW AND IS CONVEYING WASTEWATER OR RECLAIMED WATER.

HORIZONTAL SEPARATION: BETWEEN UNDERGROUND WATER MAINS AND SANITARY OR STORM SEWERS, WASTEWATER OR STORMWATER FORCE MAIN, RECLAIMED WATER PIPELINES, AND ON-SITE SEWAGE TREATMENT AND DISPOSAL SYSTEMS.

1. NEW OR RELOCATED, UNDERGROUND WATER MAINS SHALL BE LAID TO PROVIDE A HORIZONTAL DISTANCE OF AT LEAST THREE FEET BETWEEN THE OUTSIDE OF THE WATERMAIN AND THE OUTSIDE OF ANY EXISTING OR PROPOSED STORM SEWER, STORMWATER FORCE MAIN, OR PIPELINE CONVEYING RECLAIMED WATER REGULATED UNDER PART III OF CHAPTER 62-610, F.A.C.

2. NEW OR RELOCATED, UNDERGROUND WATER MAINS SHALL BE LAID TO PROVIDE HORIZONTAL DISTANCE OF AT LEAST THREE FEET, AND PREFERABLY TEN FEET, BETWEEN THE OUTSIDE OF THE WATER MAIN AND THE OUTSIDE OF ANY EXISTING OR PROPOSED VACUUM-TYPE SANITARY SEWER.

3. NEW OR RELOCATED, UNDERGROUND WATER MAINS SHALL BE LAID TO PROVIDE A HORIZONTAL DISTANCE OF AT LEAST SIX FEET, AND PREFERABLY TEN FEET, BETWEEN THE OUTSIDE OF THE WATER MAIN AND THE OUTSIDE OF ANY EXISTING OR PROPOSED GRAVITY-OR PRESSURE-TYPE SANITARY SEWER, WASTEWATER FORCE MAIN, OR PIPELINE CONVEYING RECLAIMED WATER NOT REGULATED UNDER PARTIII OF CHAPTER 62-610, F.A.C. THE MINIMUM HORIZONTAL SEPARATION DISTANCE BETWEEN WATER MAINS AND GRAVITY-TYPE SANITARY SEWERS SHALL BE REDUCED TO THREE FEET WHERE THE BOTTOM OF THE WATER MAIN IS LAID AT LEAST SIX INCHES ABOVE THE TOP OF THE SEWER.

4. NEW OR RELOCATED, UNDERGROUND WATER MAINS SHALL BE LAID TO PROVIDE A HORIZONTAL DISTANCE OF AT LEAST TEN FEET BETWEEN THE OUTSIDE OF THE WATER MAIN AND ALL PARTS OF ANY EXISTING OR PROPOSED "ON-SITE SEWAGE TREATMENT AND DISPOSAL SYSTEM" AS DEFINED IN SECTION 381.0065(2), F.S., AND RULE 64E-6002, F.A.C.

5. WHERE AN UNDERGROUND WATER MAIN IS BEING LAID LESS THAN THE REQUIRED MINIMUM HORIZONTAL DISTANCE FROM ANOTHER PIPELINE AND WHERE AN UNDERGROUND WATER MAIN IS CROSSING ANOTHER PIPELINE AND JOINTS IN THE WATER MAIN ARE BEING LOCATED LESS THAN THE REQUIRED MINIMUM DISTANCE FROM JOINTS IN OTHER PIPELINE:
A. USE OF PRESSURE-RATED PIPE CONFORMING TO THE AMERICAN WATER WORKS ASSOCIATION STANDARDS INCORPORATED INTO RULE 62-555.330, F.A.C., FOR THE OTHER PIPELINE IF IT IS GRAVITY-OR VACUUM-TYPE PIPELINE;
B. USE WELDED, FUSED OR OTHERWISE RESTRAINED JOINTS FOR EITHER WATER MAIN OR THE OTHER PIPELINE; OR
C. USE OF WATERTIGHT CASING PIPE OR CONCRETE ENCASEMENT AT LEAST FOUR INCHES THICK FOR EITHER THE WATER MAIN OR THE OTHER PIPELINE.
IF ADJACENT SYSTEMS ARE EXISTING, CONNECTION POINTS WILL BE EXISTING MANHOLES WITH APPROPRIATE PLUGGED BOOTS AT CONNECTION POINTS.

IF ADJACENT SYSTEMS ARE NOT EXISTING, MANHOLES WITH APPROPRIATELY PLACED AND PLUGGED BOOTS WILL BE LEFT FOR FUTURE CONNECTIONS.

SANITARY SEWER LEGEND

PROPOSED		EXISTING
SS	SANITARY SEWER	SS
	MANHOLE	
	FLOW ARROW	
	SINGLE SERVICE	
	DOUBLE SERVICE	
S SAN-10	STRUCTURE NUMBER	S SAN-10

DATE	REVISIONS	BY

FARNER BARLEY AND ASSOCIATES, INC.
▲ ENGINEERS ▲ SURVEYORS ▲ PLANNERS
Certificate of Authorization Number: 4709
4450 N.E. 83rd Road ○ Wildwood, Florida 34785 ○ (352) 748-3126

The Villages

VILLAGES OF SUMTER
UNIT 196

SANITARY SEWER MASTER PLAN

DATE 10-15-10
DRAWN BY MJC
CHKD BY JAH
FILE NAME 196-SAN
JOB NO. 921141.1985

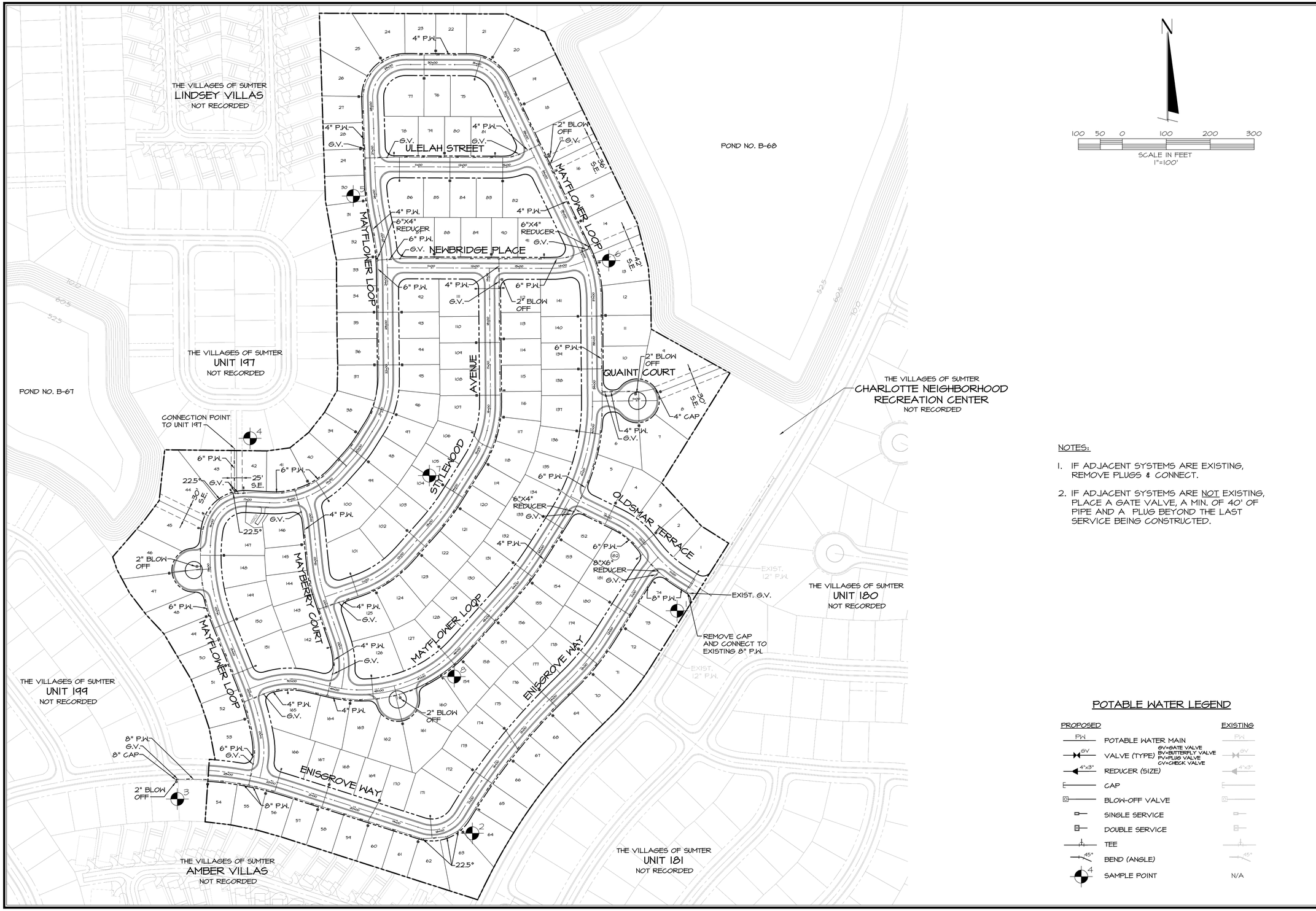

NOTES:

1. IF ADJACENT SYSTEMS ARE EXISTING, REMOVE PLUGS & CONNECT.
2. IF ADJACENT SYSTEMS ARE NOT EXISTING, PLACE A GATE VALVE, A MIN. OF 40' OF PIPE AND A PLUG BEYOND THE LAST SERVICE BEING CONSTRUCTED.

POTABLE WATER LEGEND

PROPOSED		EXISTING
PW	POTABLE WATER MAIN	PW
GV	VALVE (TYPE) GV=GATE VALVE, BV=BUTTERFLY VALVE, PV=PLUG VALVE, CV=CHECK VALVE	GV
4"x3"	REDUCER (SIZE)	4"x3"
	CAP	
	BLOW-OFF VALVE	
	SINGLE SERVICE	
	DOUBLE SERVICE	
	TEE	
45°	BEND (ANGLE)	45°
4	SAMPLE POINT	N/A

DATE	REVISIONS	BY

FARNER BARLEY AND ASSOCIATES, INC.
ENGINEERS ▲ SURVEYORS ▲ PLANNERS
Certificate of Authorization Number: 4709
4450 N.E. 83rd Road ○ Wildwood, Florida 34785 ○ (352) 748-3128

The Villages

VILLAGES OF SUMTER
UNIT 196

WATER DISTRIBUTION MASTER PLAN

DATE 10-14-10
DRAWN BY MJC
CHKD BY JAH
FILE NAME 196-WATER
JOB NO. 921141.1985

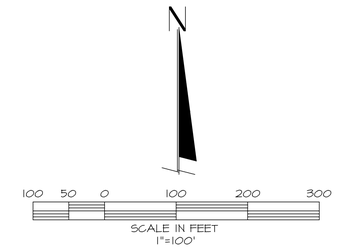

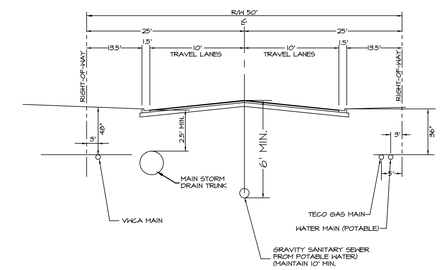

UTILITY PLACEMENT ALONG INTERNAL ROADS

(50' R/W)
(UNLESS OTHERWISE NOTED)
N.T.S.

NOTES:

1. IF ADJACENT SYSTEMS ARE EXISTING, REMOVE PLUGS & CONNECT.
2. IF ADJACENT SYSTEMS ARE NOT EXISTING, PLACE A GATE VALVE, A MIN. OF 40' OF PIPE AND A PLUG BEYOND THE LAST SERVICE BEING CONSTRUCTED.
3. ALL FIRE HYDRANTS TO BE A MINIMUM OF 4' AND A MAXIMUM OF 6' BEHIND THE BACK OF CURB.
4. SEE SHEET 5 FOR POTABLE WATER & NON-POTABLE WATER SEPARATION NOTES.

IRRIGATION WATER LEGEND

PROPOSED		EXISTING
—IRR—	IRRIGATION WATER MAIN	—IRR—
GV	VALVE (TYPE) GV=GATE VALVE BV=BUTTERFLY VALVE PV=PLUG VALVE CV=CHECK VALVE	GV
4"x3"	REDUCER (SIZE)	4"x3"
	CAP	
BO	BLOW-OFF VALVE	BO
	SINGLE SERVICE	
	DOUBLE SERVICE	
	TEE	
45°	BEND (ANGLE)	45°
	FIRE HYDRANT ASSEMBLY	

DATE	REVISIONS	BY

FARNER BARLEY AND ASSOCIATES, INC.
ENGINEERS ▲ SURVEYORS ▲ PLANNERS
Certificate of Authorization Number: 4709
4450 N.E. 83rd Road ○ Wildwood, Florida 34785 ○ (352) 748-3128

The Villages

VILLAGES OF SUMTER
UNIT 196

IRRIGATION DISTRIBUTION MASTER PLAN

DATE 10-14-10
DRAWN BY MJC
CHKD BY JAH
FILE NAME 196-IRR
JOB NO. 921141.1985

SHT. 7 OF 19

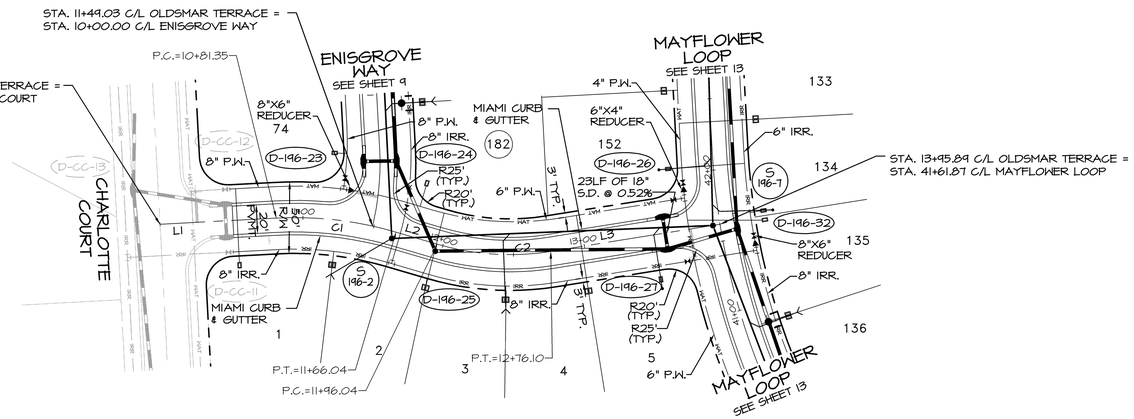

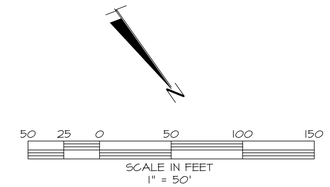

PARCEL LINE TABLE		
LINE	LENGTH	BEARING
L1	81.35'	S57°45'02"E
L2	30.00'	N38°20'23"W
L3	119.74'	N63°44'23"W

PARCEL CURVE TABLE						
CURVE	LENGTH	RADIUS	DELTA	TANGENT	CHORD BNG.	CHORD
C1	84.70'	250.00'	19°24'39"	42.76'	S48°02'42"E	84.70'
C2	80.06'	180.00'	25°29'00"	40.70'	N51°04'53"W	80.06'

OLDSMAR TERRACE

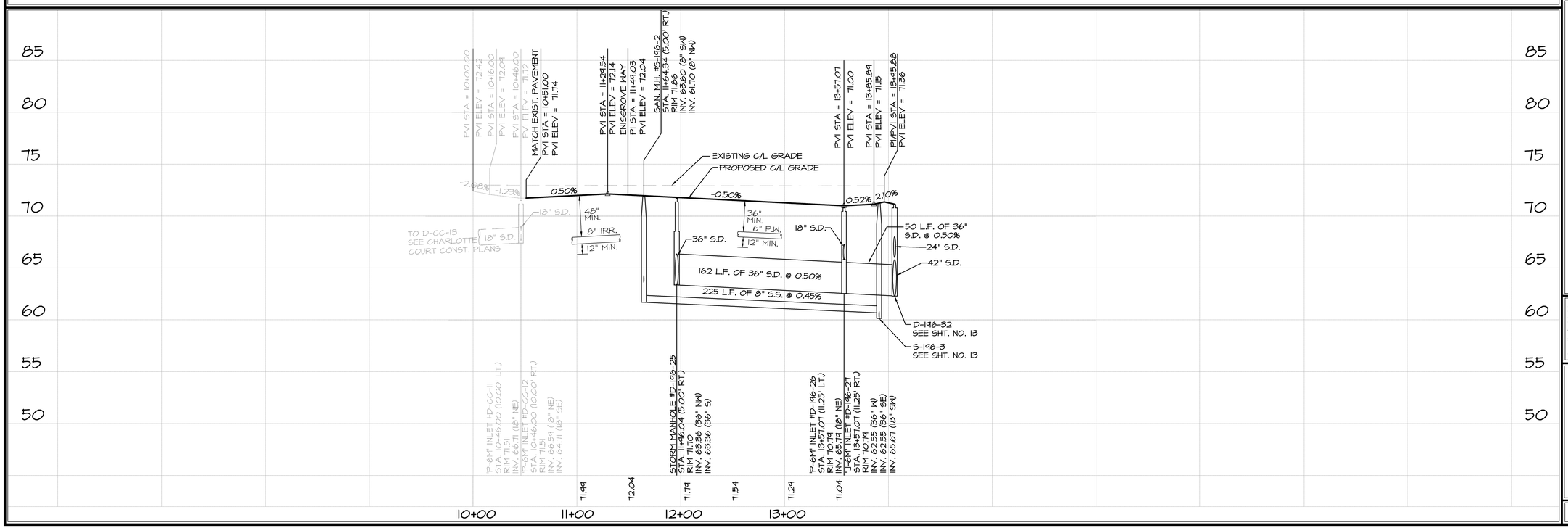

DATE	REVISIONS	BY

FARNER BARLEY AND ASSOCIATES, INC.
▲ ENGINEERS ▲ SURVEYORS ▲ PLANNERS
Certificate of Authorization Number: 4709
4450 N.E. 83rd Road O Wildwood, Florida 34785 O (352) 748-3126

The Villages

VILLAGES OF SUMTER
UNIT 196

PLAN & PROFILE
OLDSMAR TERRACE

DATE 9/30/10
DRAWN BY MJC
CHKD BY JAH
FILE NAME PP196
JOB NO. 921141.1985

SHT. 8 OF 19

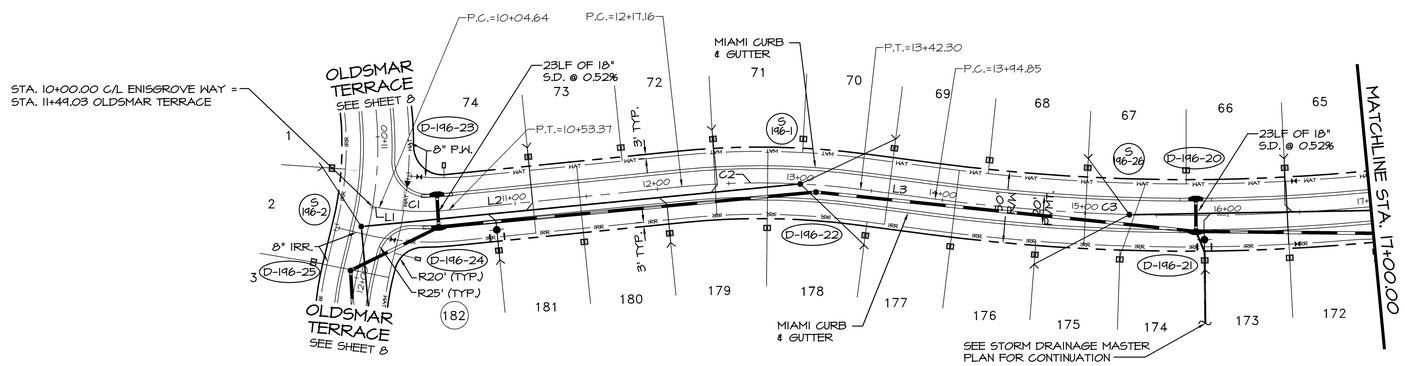

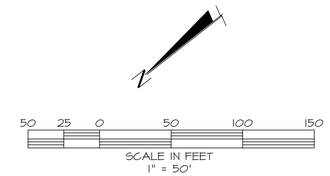

PARCEL LINE TABLE		
LINE	LENGTH	BEARING
L1	4.64'	N47°45'34"E
L2	163.79'	N32°14'58"E
L3	52.55'	N45°25'45"E

PARCEL CURVE TABLE						
CURVE	LENGTH	RADIUS	DELTA	TANGENT	CHORD BNG.	CHORD
C1	48.73'	180.00'	15°30'41"	24.52'	S40°00'19"W	48.73'
C2	125.13'	544.00'	13°10'46"	62.84'	N38°50'21"E	125.13'
C3	345.17'	1356.00'	14°35'04"	173.52'	S38°08'12"W	345.17'

ENISGROVE WAY

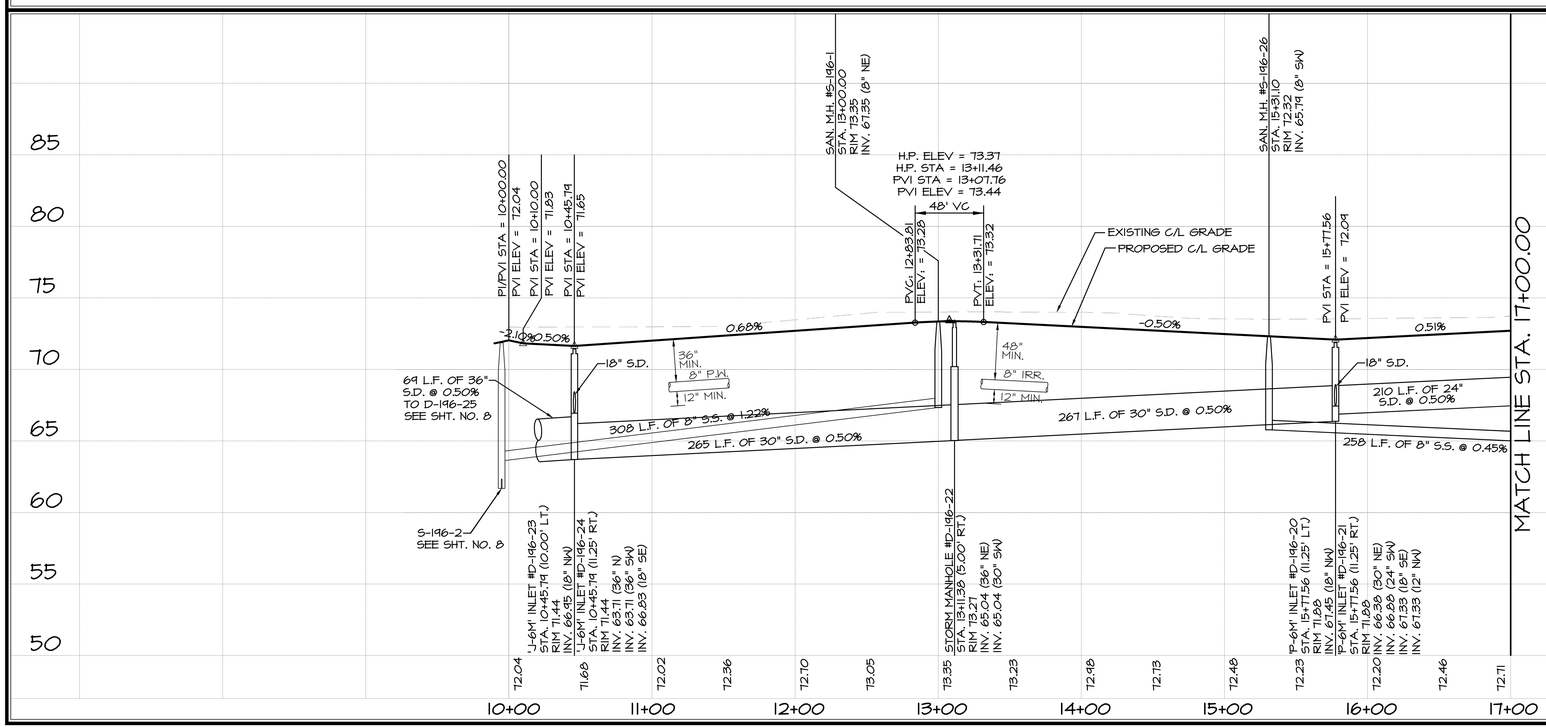

BY	REVISIONS	DATE

FARNER BARLEY AND ASSOCIATES, INC.
▲ ENGINEERS ▲ SURVEYORS ▲ PLANNERS
Certificate of Authorization Number: 4709
4450 N.E. 83rd Road O Wildwood, Florida 34785 O (352) 748-3126

The Villages

VILLAGES OF SUMTER
UNIT 196

PLAN & PROFILE
ENISGROVE WAY

DATE 9/30/10
DRAWN BY MJC
CHKD BY JAH
FILE NAME PP2DWG
JOB NO. 92141.1985

SHT. 9 OF 19

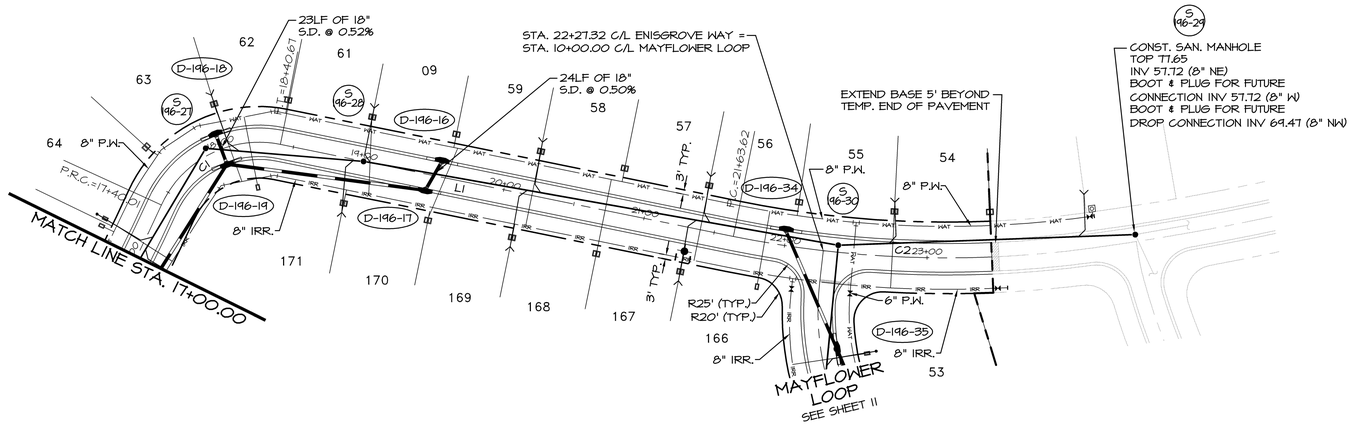

ENISGROVE WAY

PARCEL LINE TABLE		
LINE	LENGTH	BEARING
L1	322.95	S72°15'32"E

PARCEL CURVE TABLE						
CURVE	LENGTH	RADIUS	DELTA	TANGENT	CHORD BNG.	CHORD
C1	100.66'	75.00'	76°53'48"	59.55'	N69°17'34"E	100.66'
C2	181.66'	750.00'	13°52'40"	91.28'	N79°11'52"W	181.66'

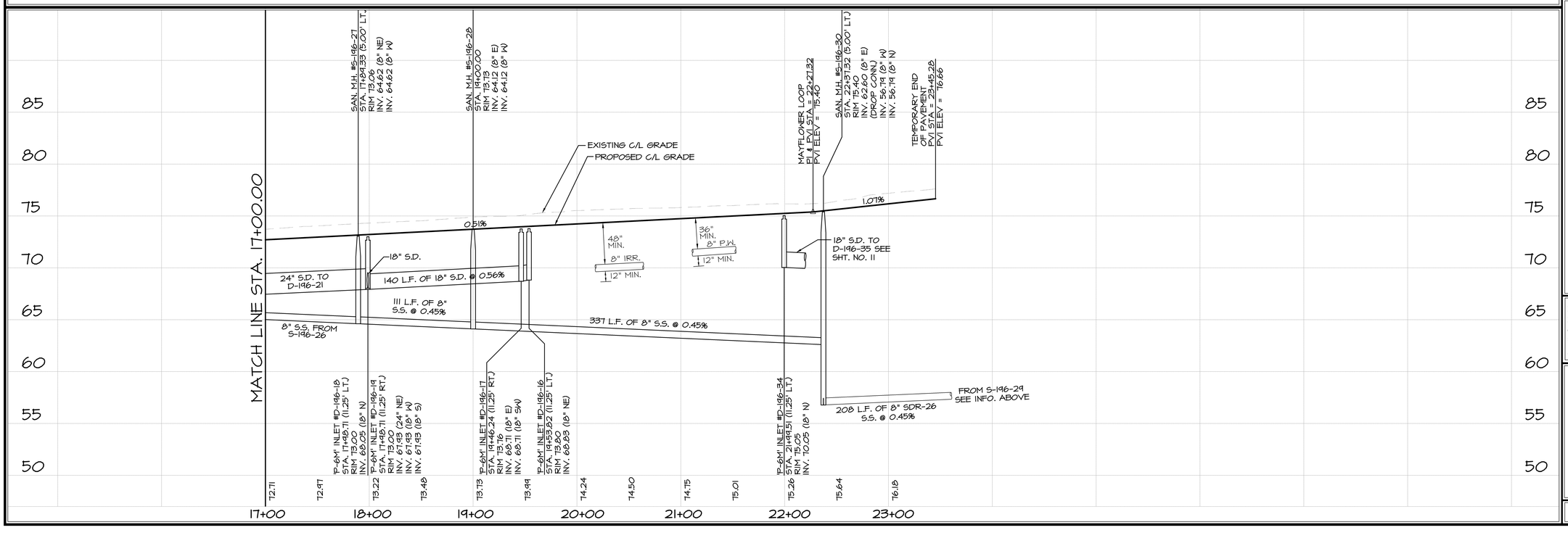

DATE	REVISIONS	BY

FARNER BARLEY AND ASSOCIATES, INC.
▲ ENGINEERS ▲ SURVEYORS ▲ PLANNERS
Certificate of Authorization Number: 4709
4450 N.E. 83rd Road O Wildwood, Florida 34785 O (352) 748-3126

The Villages

VILLAGES OF SUMTER
UNIT 196

PLAN & PROFILE ENISGROVE WAY

DATE 9/30/10
DRAWN BY MJC
CHKD BY JAH
FILE NAME PP3D196
JOB NO. 921141.1985

SHT. 10 OF 19

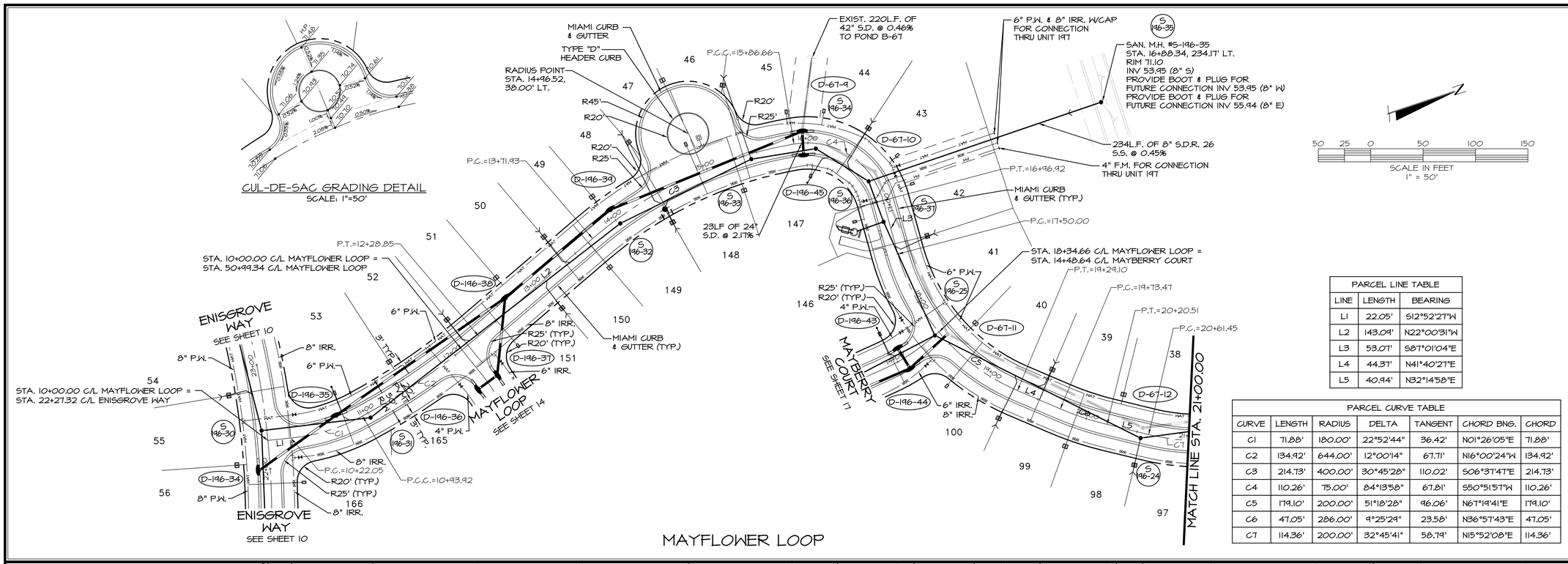

PARCEL LINE TABLE		
LINE	LENGTH	BEARING
L1	22.05'	S12°52'27"W
L2	143.09'	N22°00'31"W
L3	53.07'	S87°01'04"E
L4	44.37'	N41°40'27"E
L5	40.44'	N32°14'58"E

PARCEL CURVE TABLE						
CURVE	LENGTH	RADIUS	DELTA	TANGENT	CHORD BNG.	CHORD
C1	71.88'	180.00'	22°52'44"	36.42'	N01°26'05"E	71.88'
C2	134.92'	644.00'	12°00'14"	67.71'	N16°00'24"W	134.92'
C3	214.73'	400.00'	30°45'28"	110.02'	S06°37'47"E	214.73'
C4	110.26'	75.00'	84°13'58"	67.81'	S50°51'57"W	110.26'
C5	179.10'	200.00'	51°18'28"	96.06'	N67°19'41"E	179.10'
C6	47.05'	286.00'	9°25'29"	23.58'	N36°57'43"E	47.05'
C7	114.36'	200.00'	32°45'41"	58.79'	N15°52'08"E	114.36'

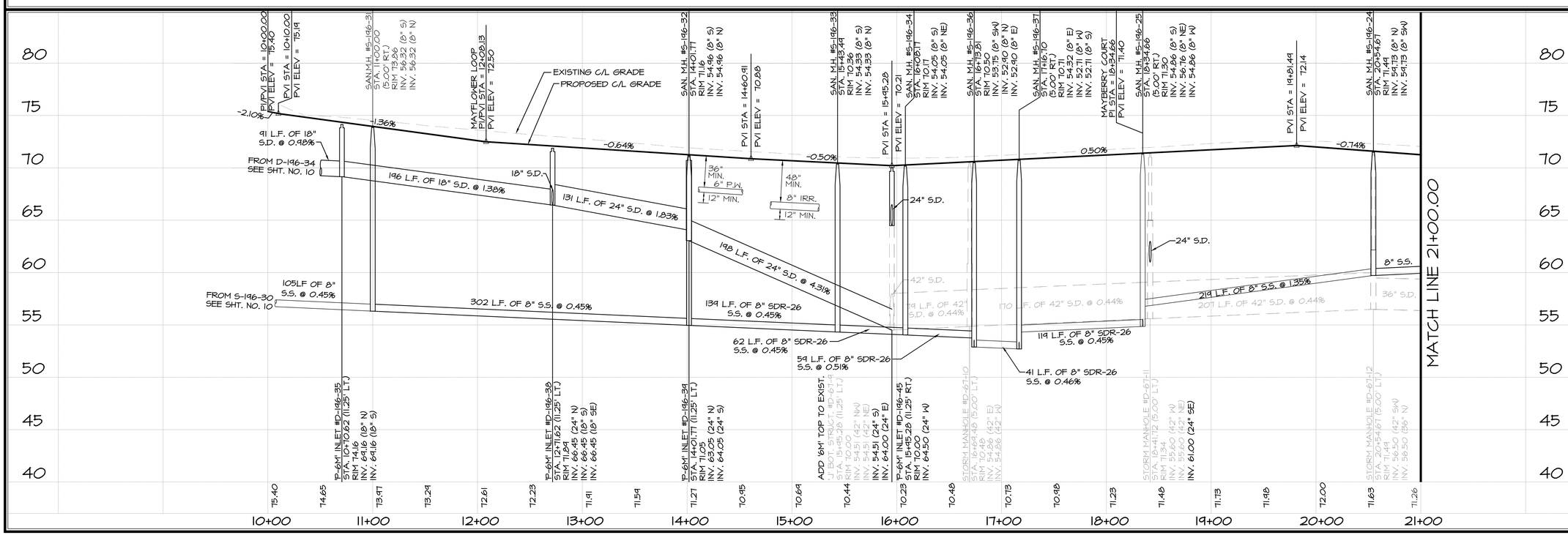

BY | REVISIONS | DATE

FARNER BARLEY AND ASSOCIATES, INC.
ENGINEERS ▲ SURVEYORS ▲ PLANNERS
Certificate of Authorization Number: 4709
4450 N.E. 83rd Road O Wildwood, Florida 34785 O (352) 748-3126

The Villages

VILLAGES OF SUMTER UNIT 196

PLAN & PROFILE MAYFLOWER LOOP

DATE 9/30/10
DRAWN BY MJC
CHKD BY JAH
FILE NAME PP4D196
JOB NO. 92141.1985

SHT. 11 OF 19

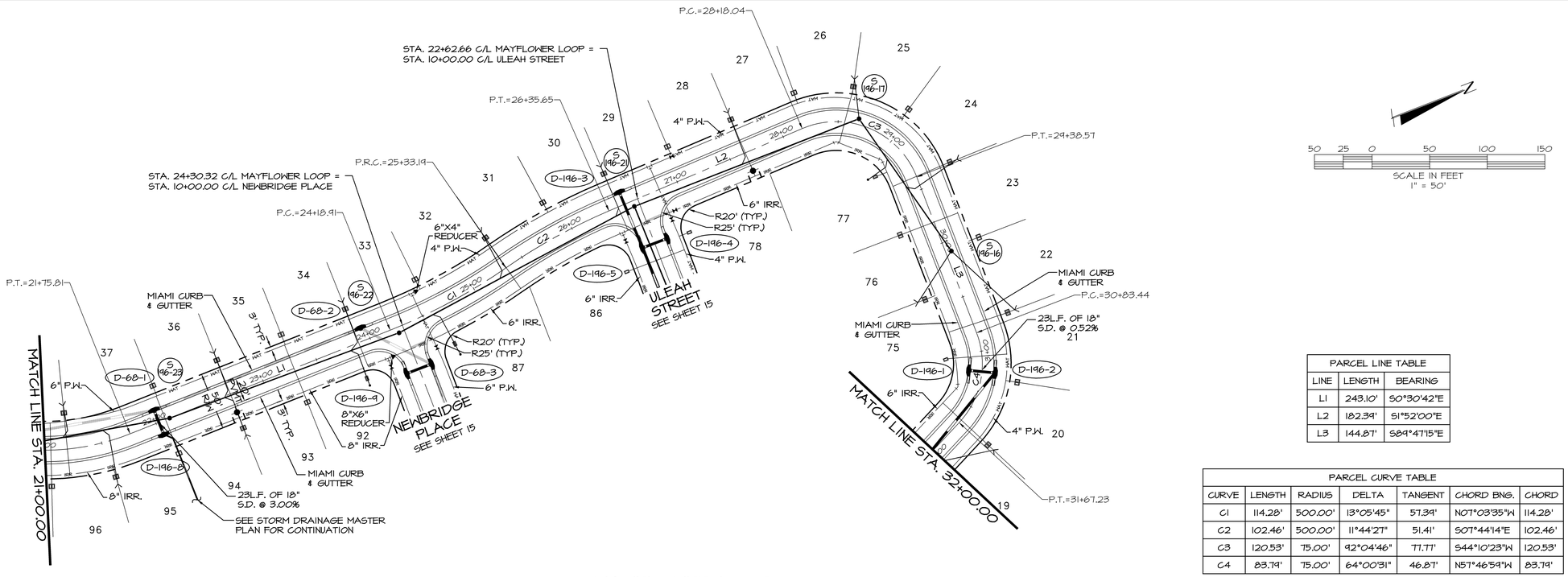

MAYFLOWER LOOP

PARCEL LINE TABLE		
LINE	LENGTH	BEARING
L1	243.10'	S0°30'42"E
L2	182.39'	S1°52'00"E
L3	144.87'	S84°47'15"E

PARCEL CURVE TABLE						
CURVE	LENGTH	RADIUS	DELTA	TANGENT	CHORD BNG.	CHORD
C1	114.28'	500.00'	13°05'45"	57.39'	N07°03'35"W	114.28'
C2	102.46'	500.00'	11°44'27"	51.41'	S07°44'14"E	102.46'
C3	120.53'	75.00'	92°04'46"	77.77'	S44°10'23"W	120.53'
C4	83.79'	75.00'	64°00'31"	46.87'	N57°46'59"W	83.79'

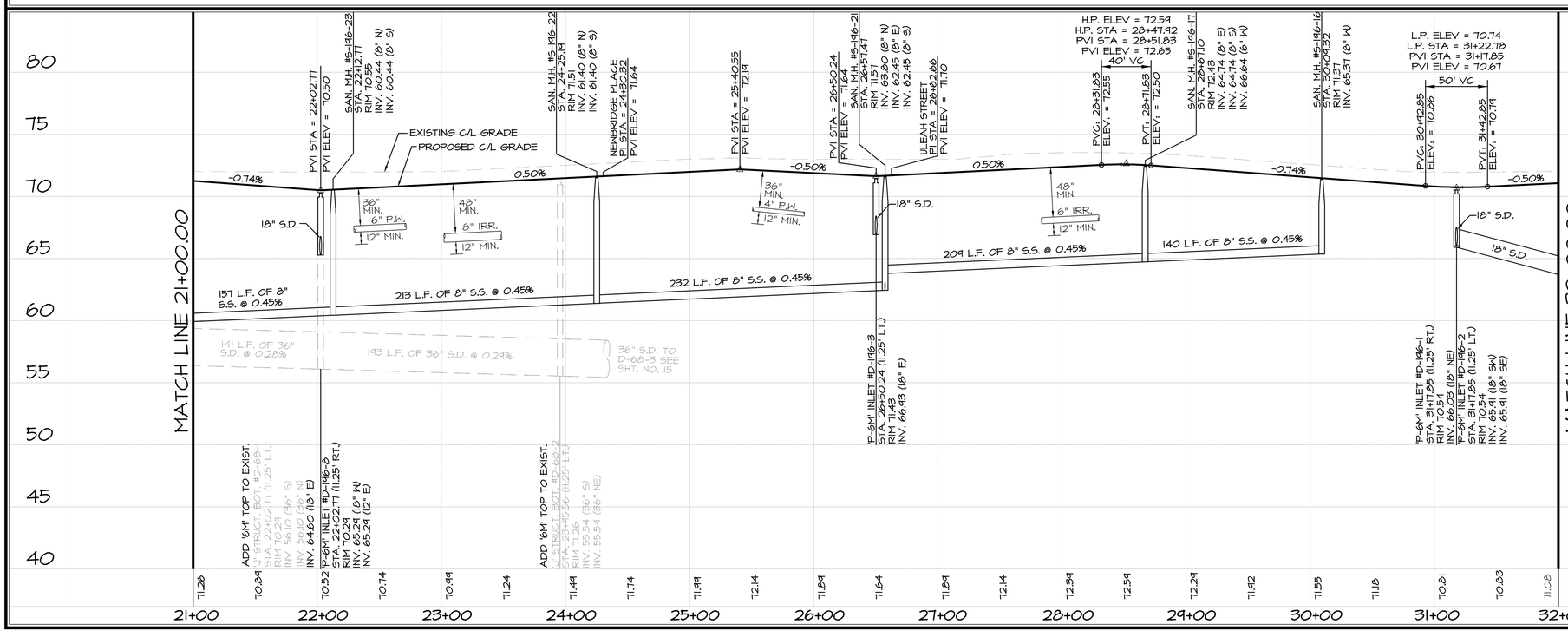

DATE	REVISIONS	BY

FARNER BARLEY AND ASSOCIATES, INC.
▲ ENGINEERS ▲ SURVEYORS ▲ PLANNERS
Certificate of Authorization Number: 4709
4450 N.E. 83rd Road O Wildwood, Florida 34785 O (352) 748-3126

The Villages

VILLAGES OF SUMTER
UNIT 196

PLAN & PROFILE MAYFLOWER LOOP

DATE 9/30/10
DRAWN BY MJC
CHKD BY JAH
FILE NAME P95D196
JOB NO. 92.1141.1.985

SHT. 12 OF 19

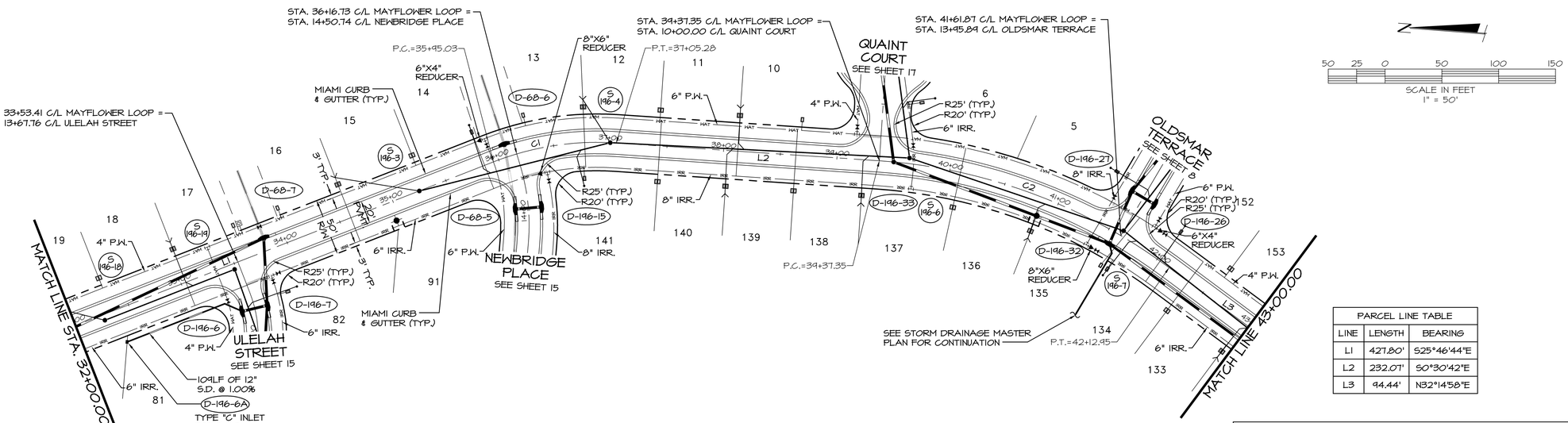

MAYFLOWER LOOP

PARCEL LINE TABLE		
LINE	LENGTH	BEARING
L1	427.80'	S25°46'44"E
L2	232.07'	S0°30'42"E
L3	94.44'	N32°14'58"E

PARCEL CURVE TABLE						
CURVE	LENGTH	RADIUS	DELTA	TANGENT	CHORD BNG.	CHORD
C1	110.25'	250.00'	25°16'01"	56.04'	N13°08'43"W	110.25'
C2	275.60'	482.00'	32°45'41"	141.68'	N15°52'08"E	275.60'

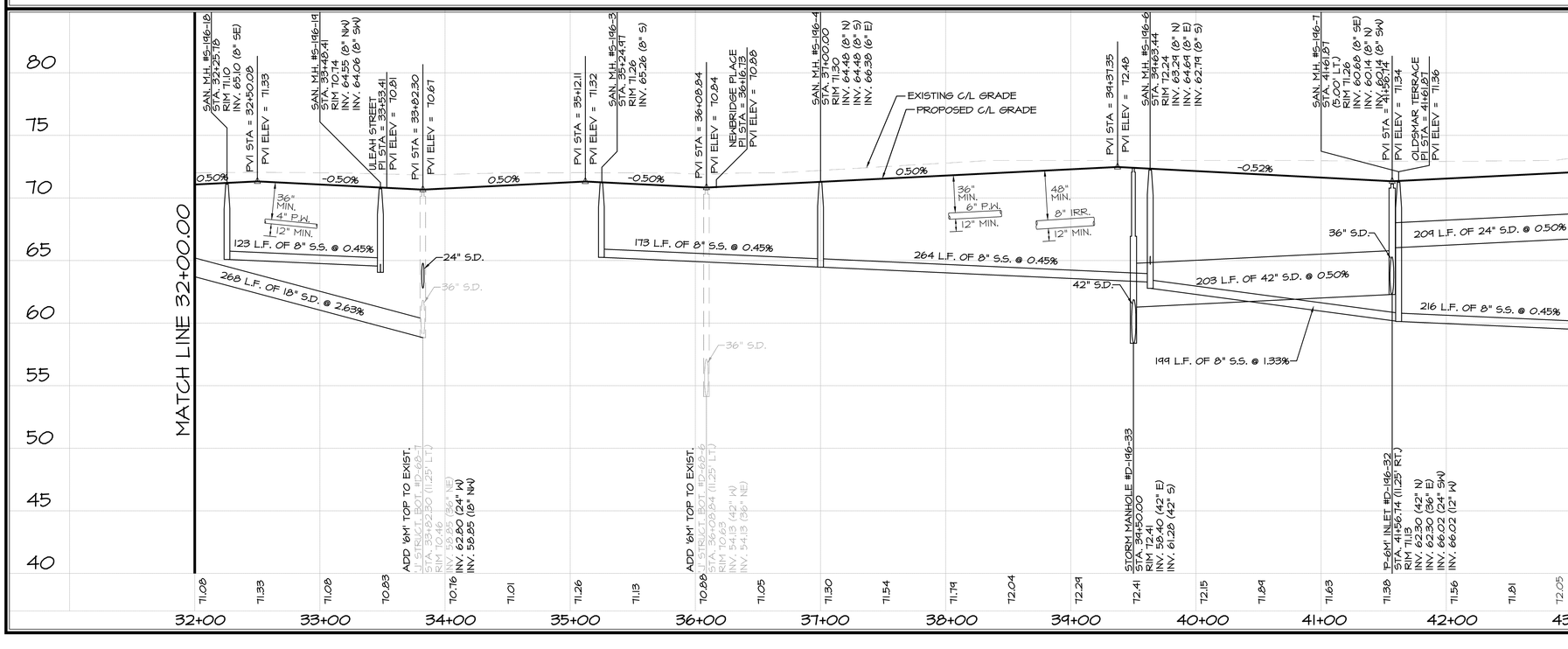

REVISIONS	BY

DATE

FARNER BARLEY AND ASSOCIATES, INC.
▲ ENGINEERS ▲ SURVEYORS ▲ PLANNERS
Certificate of Authorization Number: 4709
4450 N.E. 83rd Road O Wildwood, Florida 34785 O (352) 748-3126

The Villages

VILLAGES OF SUMTER
UNIT 196

PLAN & PROFILE MAYFLOWER LOOP

DATE 9/30/10
DRAWN BY MJC
CHKD BY JAH
FILE NAME PP6DAG
JOB NO. 92141.1985

SHT. 13 OF 19

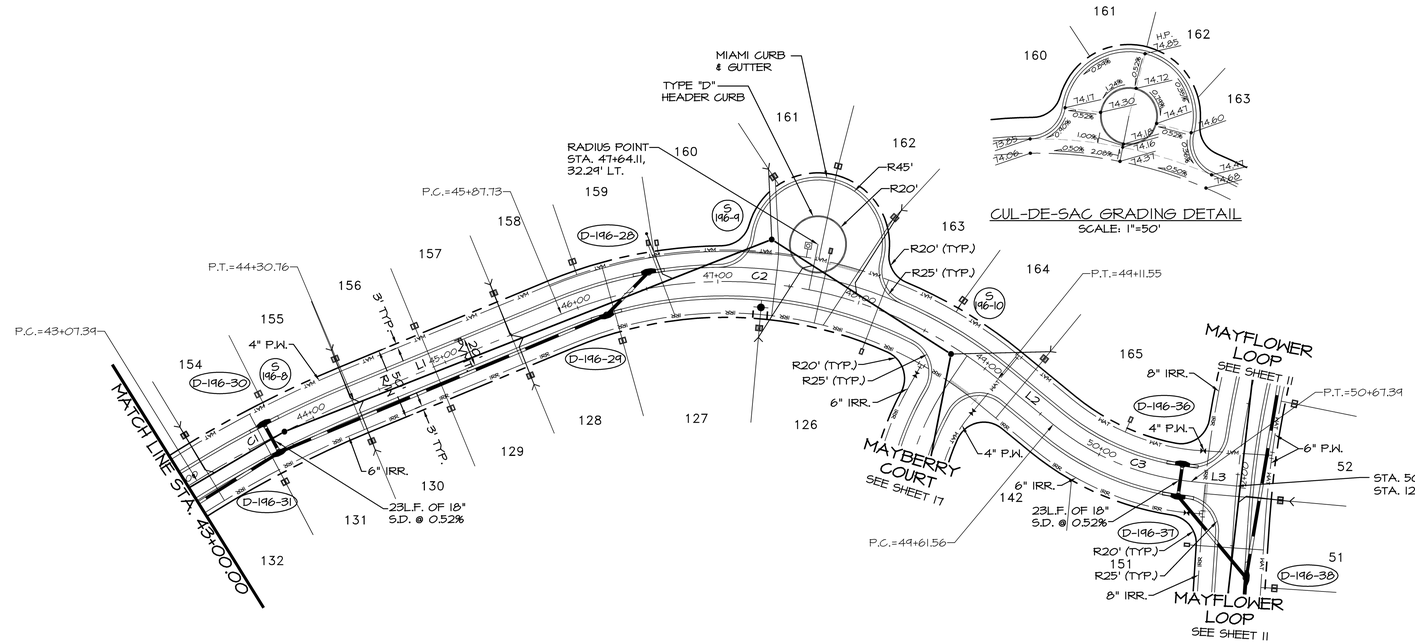

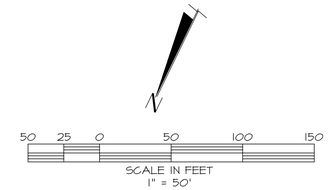

PARCEL LINE TABLE		
LINE	LENGTH	BEARING
L1	156.97'	N41°40'27"E
L2	50.01'	S76°28'48"E
L3	31.95'	N69°50'03"E

PARCEL CURVE TABLE						
CURVE	LENGTH	RADIUS	DELTA	TANGENT	CHORD BNG.	CHORD
C1	123.37'	750.00'	9°25'29"	61.82'	N36°57'43"E	123.37'
C2	323.82'	300.00'	61°50'45"	179.71'	N72°35'50"E	323.82'
C3	105.83'	180.00'	33°41'10"	54.49'	S86°40'38"W	105.83'

MAYFLOWER LOOP

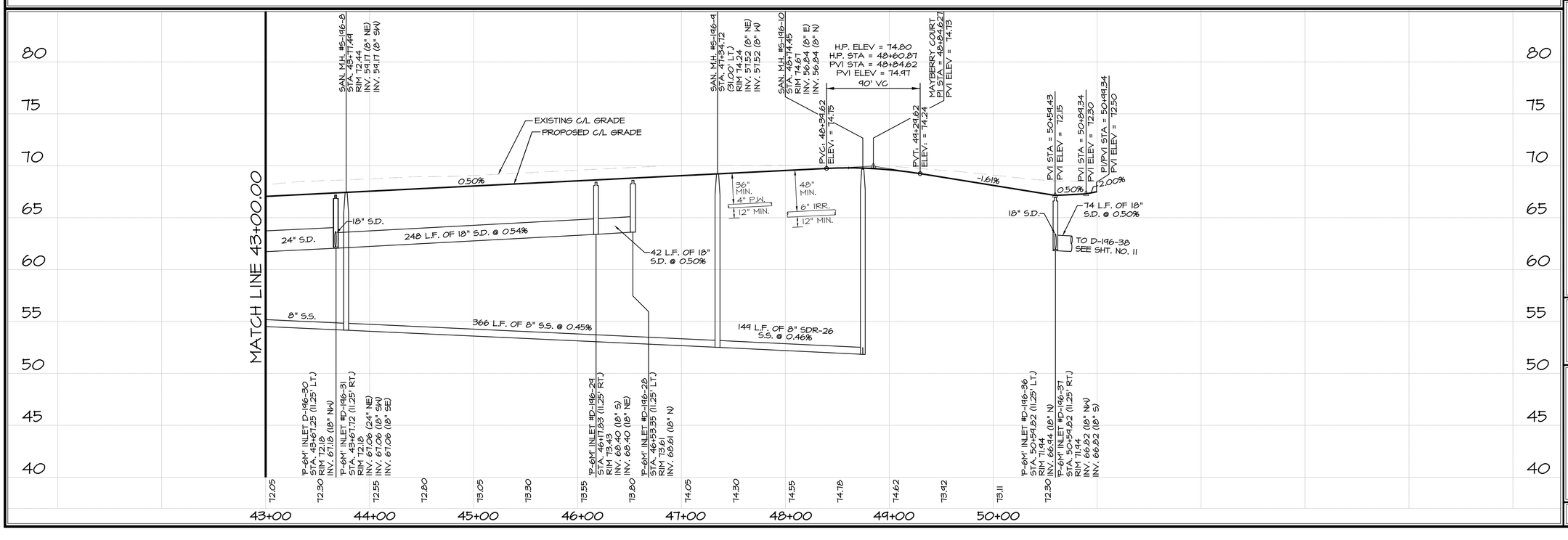

DATE	REVISIONS	BY

FARNER BARLEY AND ASSOCIATES, INC.
▲ ENGINEERS ▲ SURVEYORS ▲ PLANNERS
Certificate of Authorization Number: 4709
4450 N.E. 83rd Road ○ Wildwood, Florida 34785 ○ (352) 748-3126

The Villages

VILLAGES OF SUMTER
UNIT 196

PLAN & PROFILE MAYFLOWER LOOP

DATE 9/30/10
DRAWN BY MJC
CHKD BY JAH
FILE NAME PPT196
JOB NO. 92141.1985

SHT. 14 OF 19

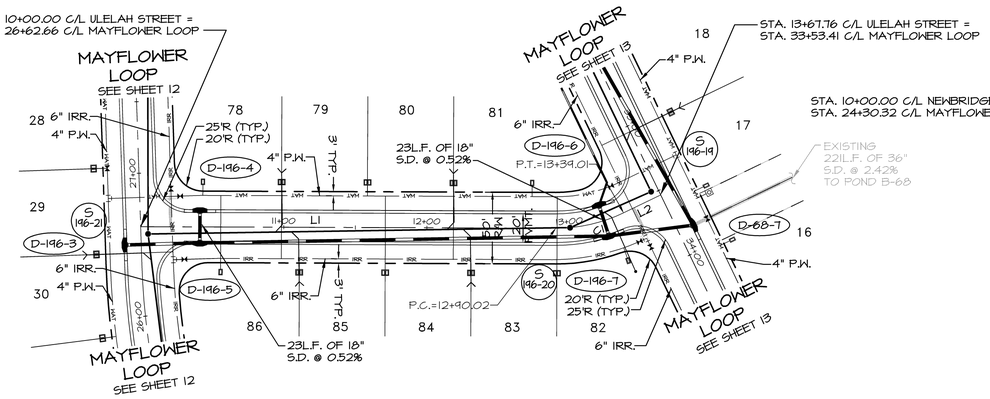

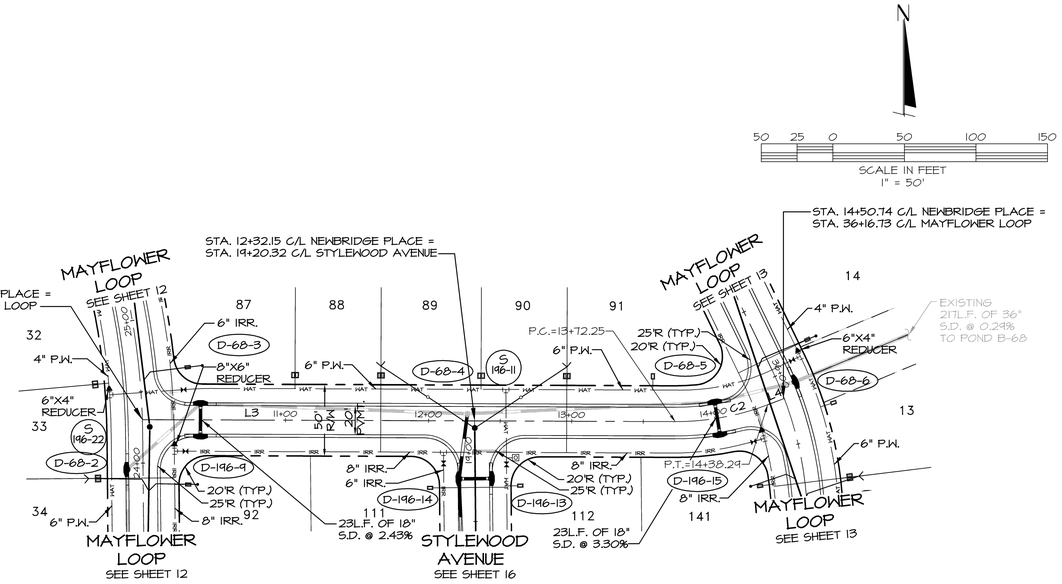

PARCEL LINE TABLE		
LINE	LENGTH	BEARING
L1	240.02'	S84°47'15"E
L2	28.74'	N64°13'16"E

PARCEL CURVE TABLE						
CURVE	LENGTH	RADIUS	DELTA	TANGENT	CHORD BNG.	CHORD
C1	48.99'	108.00'	25°59'29"	24.93'	N77°13'01"E	48.99'

ULELAH STREET

PARCEL LINE TABLE		
LINE	LENGTH	BEARING
L3	372.25'	S84°47'15"E
L4	12.45'	N69°11'36"E

PARCEL CURVE TABLE						
CURVE	LENGTH	RADIUS	DELTA	TANGENT	CHORD BNG.	CHORD
C2	66.04'	180.00'	21°01'09"	33.39'	N79°42'11"E	66.03'

NEWBRIDGE PLACE

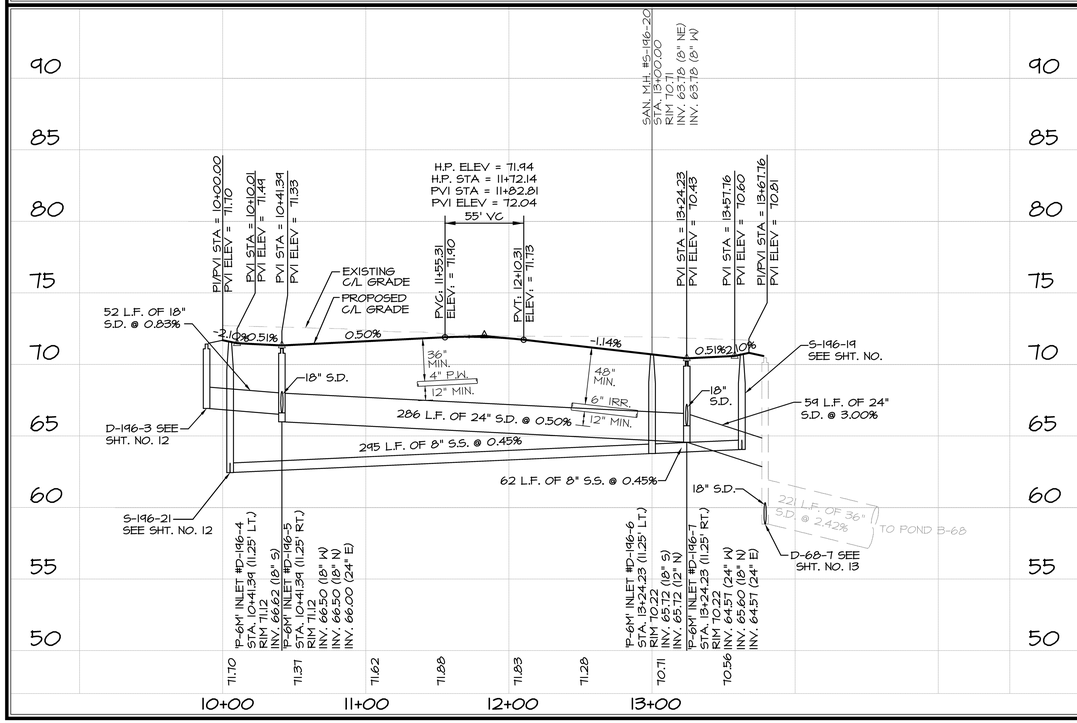

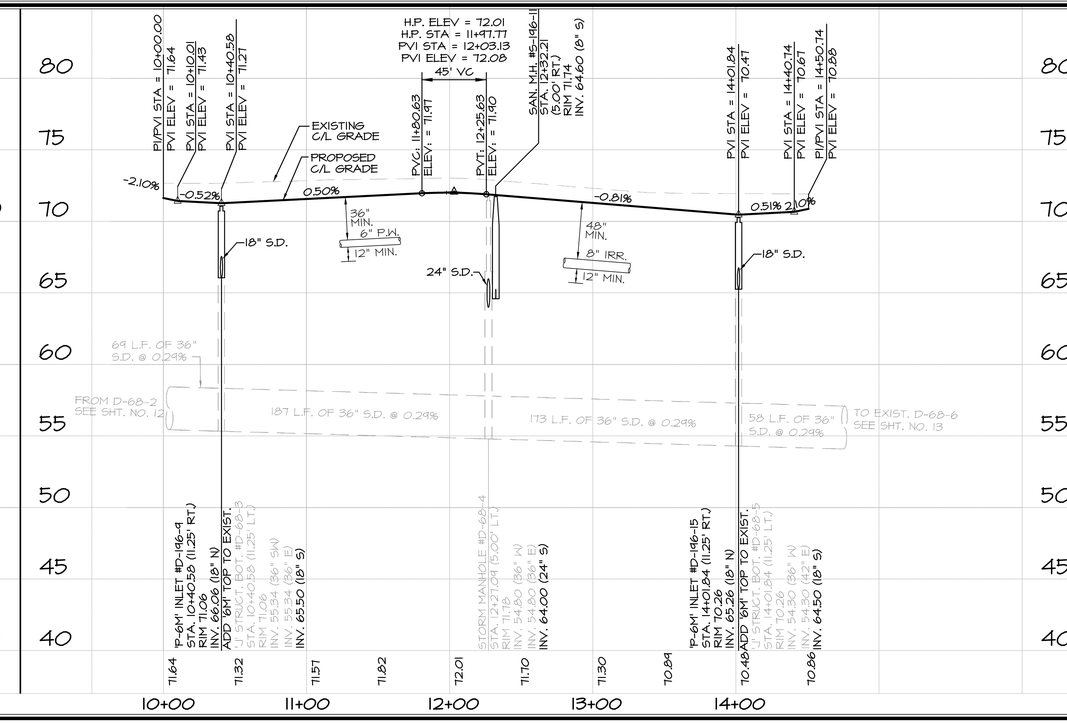

REVISIONS

DATE	BY

FARNER BARLEY AND ASSOCIATES, INC.
▲ ENGINEERS ▲ SURVEYORS ▲ PLANNERS
Certificate of Authorization Number: 4709
4450 N.E. 83rd Road O Wildwood, Florida 34785 O (352) 748-3126

The Villages

VILLAGES OF SUMTER
UNIT 196

PLAN & PROFILE ULELAH STREET & NEWBRIDGE PLACE

DATE 9/30/10
DRAWN BY MJC
CHKD BY JAH
FILE NAME PP8DWG
JOB NO. 92114.1985

SHT. 15 OF 19

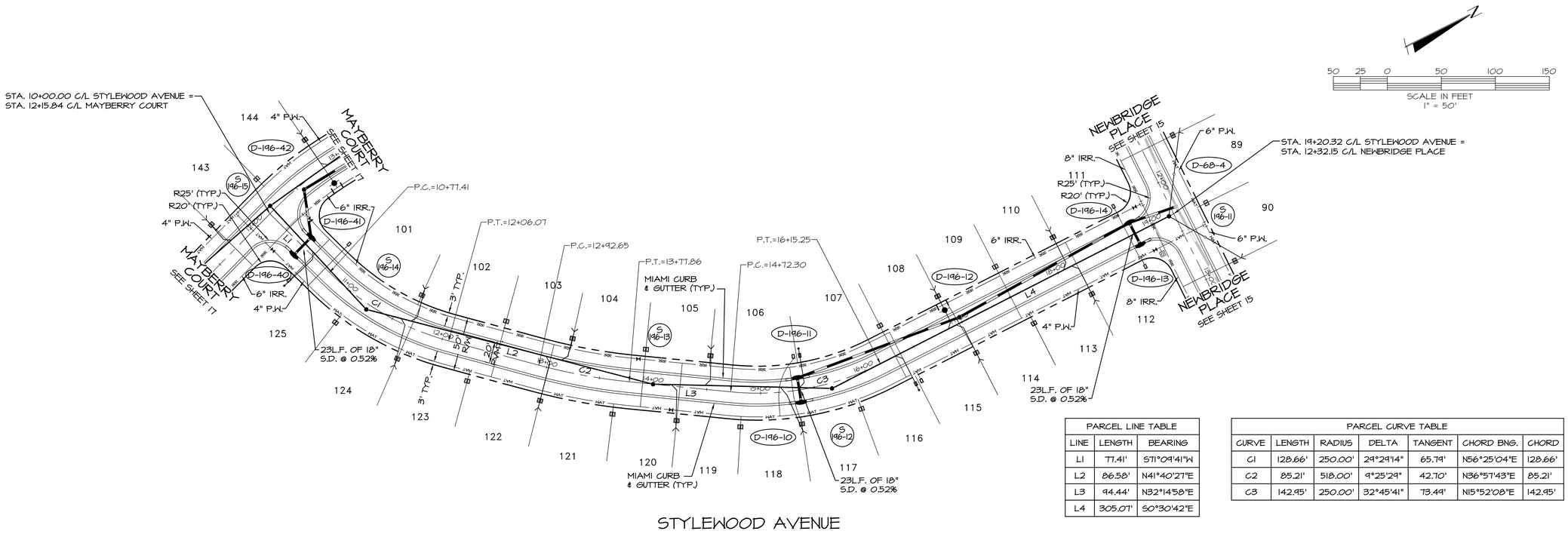

PARCEL LINE TABLE		
LINE	LENGTH	BEARING
L1	77.41'	S71°09'41"W
L2	86.58'	N41°40'27"E
L3	94.44'	N32°14'58"E
L4	305.07'	S0°30'42"E

PARCEL CURVE TABLE						
CURVE	LENGTH	RADIUS	DELTA	TANGENT	CHORD BNG.	CHORD
C1	128.66'	250.00'	29°29'14"	65.79'	N56°25'04"E	128.66'
C2	85.21'	518.00'	9°25'29"	42.70'	N36°57'43"E	85.21'
C3	142.95'	250.00'	32°45'41"	73.44'	N15°52'08"E	142.95'

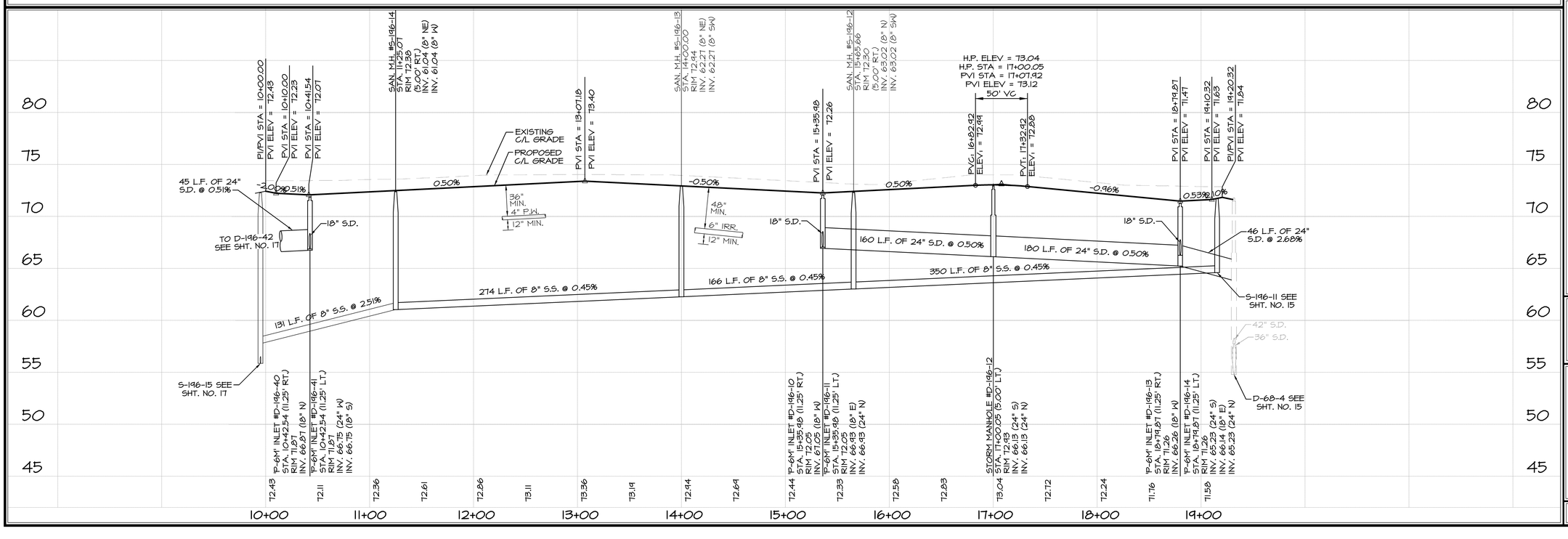

STYLEWOOD AVENUE

DATE	REVISIONS	BY

FARNER BARLEY AND ASSOCIATES, INC.
▲ ENGINEERS ▲ SURVEYORS ▲ PLANNERS
Certificate of Authorization Number: 4709
4450 N.E. 83rd Road ○ Wildwood, Florida 34785 ○ (352) 748-3126

The Villages

VILLAGES OF SUMTER
UNIT 196

PLAN & PROFILE STYLEWOOD AVENUE

DATE 10/12/10
DRAWN BY MJC
CHKD BY JAH
FILE NAME PP196
JOB NO. 92141.1985

SHT. 16 OF 19

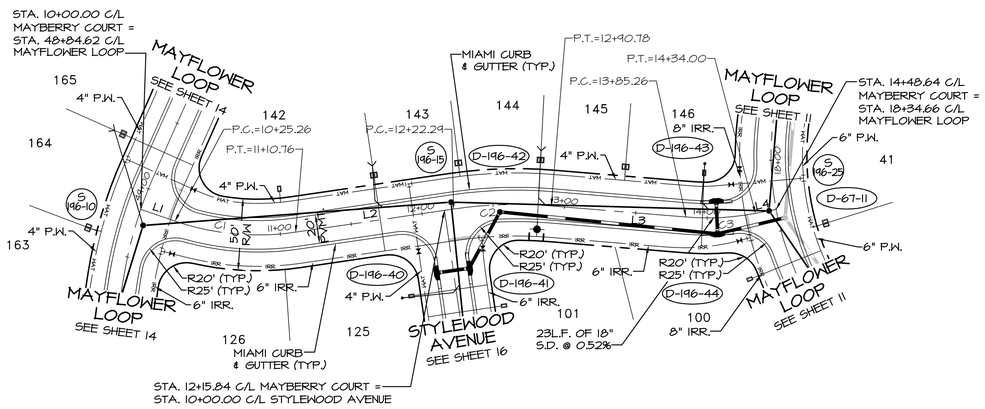

PARCEL LINE TABLE		
LINE	LENGTH	BEARING
L1	25.26'	S8°22'36"W
L2	111.53'	N18°50'19"W
L3	94.48'	N5°45'26"W
L4	14.63'	N21°16'17"W

PARCEL CURVE TABLE						
CURVE	LENGTH	RADIUS	DELTA	TANGENT	CHORD BNG.	CHORD
C1	85.50'	180.00'	27°12'55"	43.57'	N05°13'51"W	85.50'
C2	68.49'	300.00'	13°04'53"	34.40'	S12°17'52"E	68.49'
C3	48.74'	180.00'	15°30'51"	24.52'	N13°30'51"W	48.74'

MAYBERRY COURT

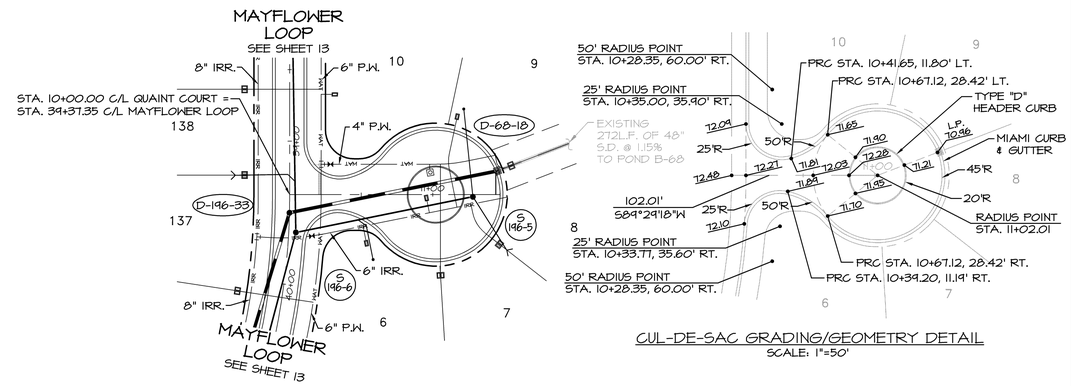

CUL-DE-SAC GRADING/GEOMETRY DETAIL
SCALE: 1"=50'

QUAINT COURT

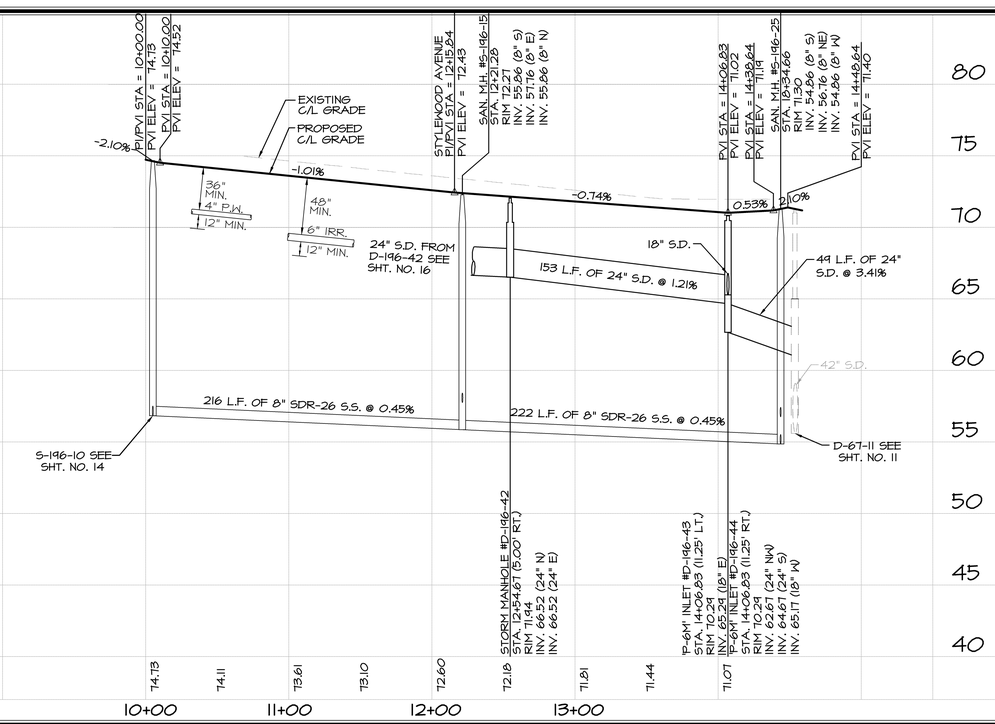

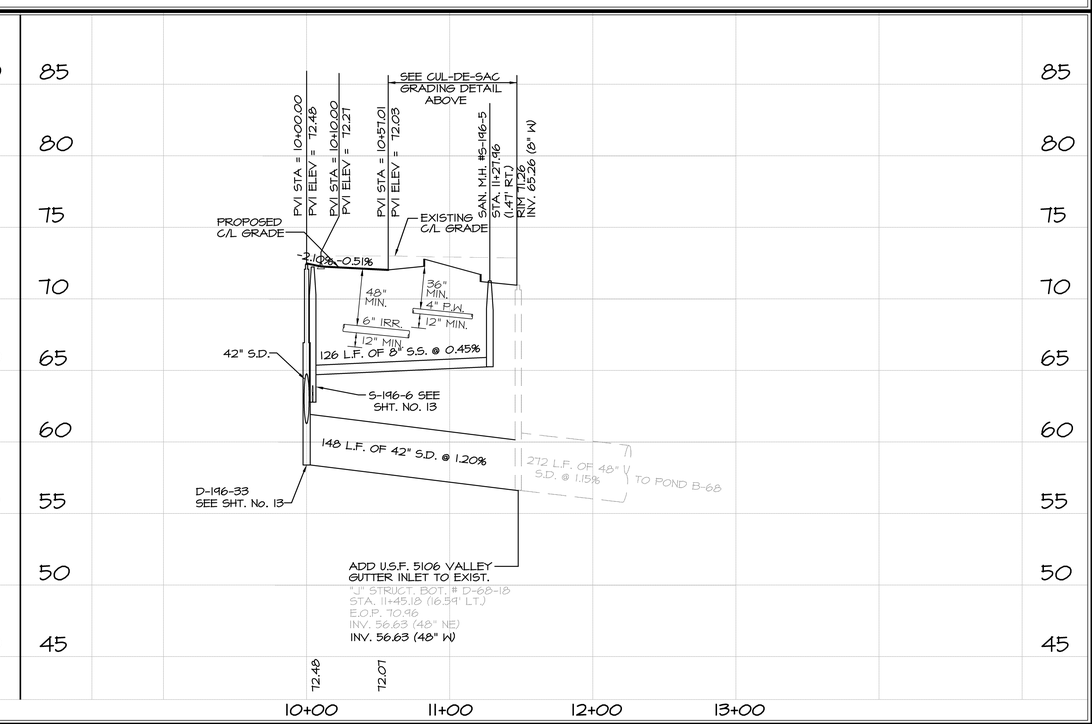

DATE	REVISIONS	BY

FARNER BARLEY AND ASSOCIATES, INC.
▲ ENGINEERS ▲ SURVEYORS ▲ PLANNERS
Certificate of Authorization Number: 4709
4450 N.E. 83rd Road O Wildwood, Florida 34785 O (352) 748-3126

The Villages
VILLAGES OF SUMTER UNIT 196

PLAN & PROFILE MAYBERRY COURT & QUAINT COURT

DATE 10/12/10
DRAWN BY MJC
CHKD BY JAH
FILE NAME PROP196
JOB NO. 921141.1985

SHT. 17 OF 19

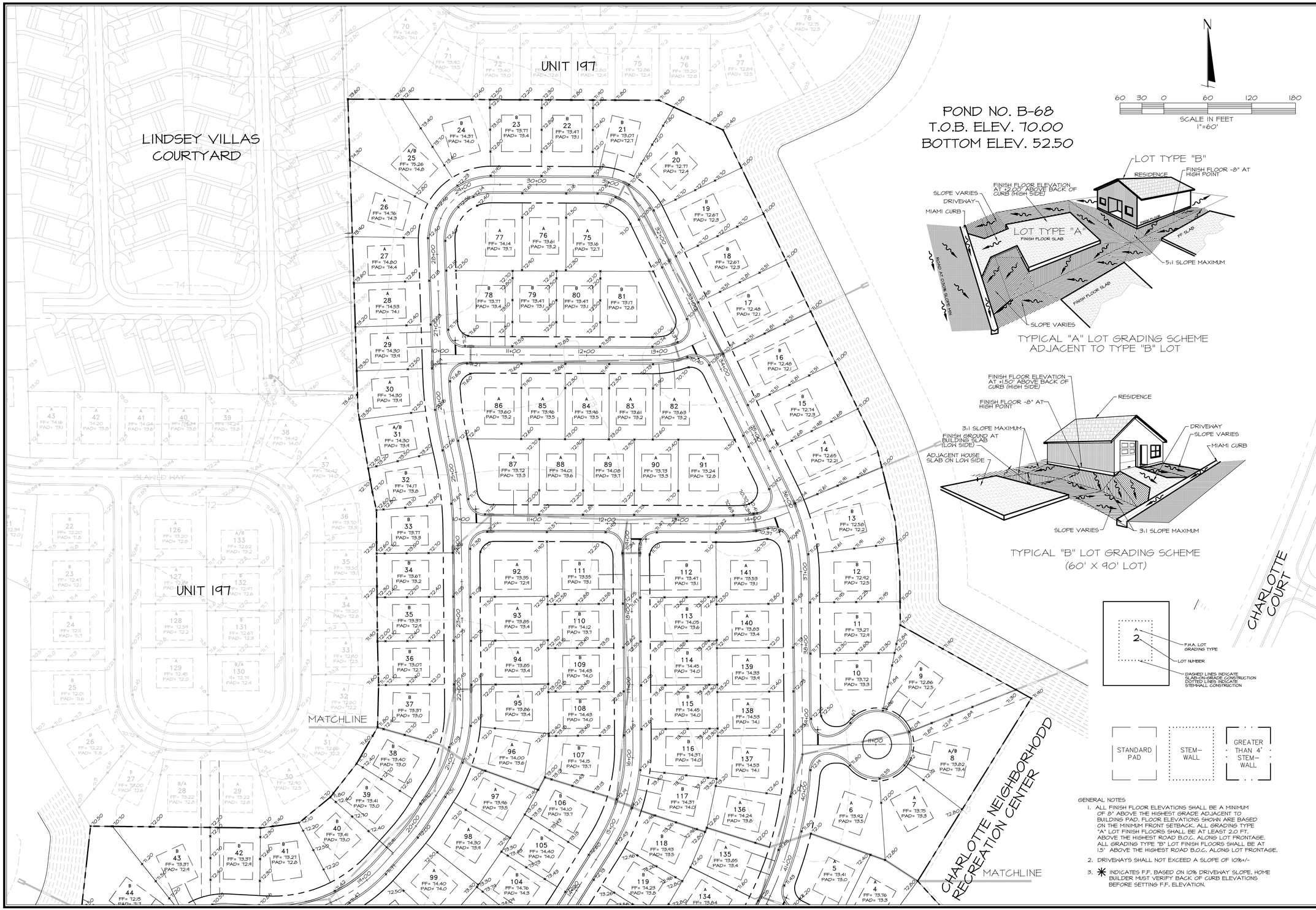

GENERAL NOTES

1. ALL FINISH FLOOR ELEVATIONS SHALL BE A MINIMUM OF 8" ABOVE THE HIGHEST GRADE ADJACENT TO BUILDING PAD. FLOOR ELEVATIONS SHOWN ARE BASED ON THE MINIMUM FRONT SETBACK. ALL GRADING TYPE "A" LOT FINISH FLOORS SHALL BE AT LEAST 2.0 FT. ABOVE THE HIGHEST ROAD B.O.C. ALONG LOT FRONTAGE. ALL GRADING TYPE "B" LOT FINISH FLOORS SHALL BE AT 1.5' ABOVE THE HIGHEST ROAD B.O.C. ALONG LOT FRONTAGE.
2. DRIVEWAYS SHALL NOT EXCEED A SLOPE OF 10%+/-
3. ✳ INDICATES F.F. BASED ON 10% DRIVEWAY SLOPE. HOME BUILDER MUST VERIFY BACK OF CURB ELEVATIONS BEFORE SETTING F.F. ELEVATION.

DATE	REVISIONS	BY

FARNER BARLEY AND ASSOCIATES, INC.
▲ ENGINEERS ▲ SURVEYORS ▲ PLANNERS
Certificate of Authorization Number: 4709
4450 N.E. 83rd Road o Wildwood, Florida 34785 o (352) 748-3126

The Villages

VILLAGES OF SUMTER
UNIT 196

MASTER GRADING PLAN

DATE 6-26-10
DRAWN BY MJG
CHKD BY DC/JAH
FILE NAME H6 GRADE.DWG
JOB NO. 921141.1985

SHT. 18 OF 19

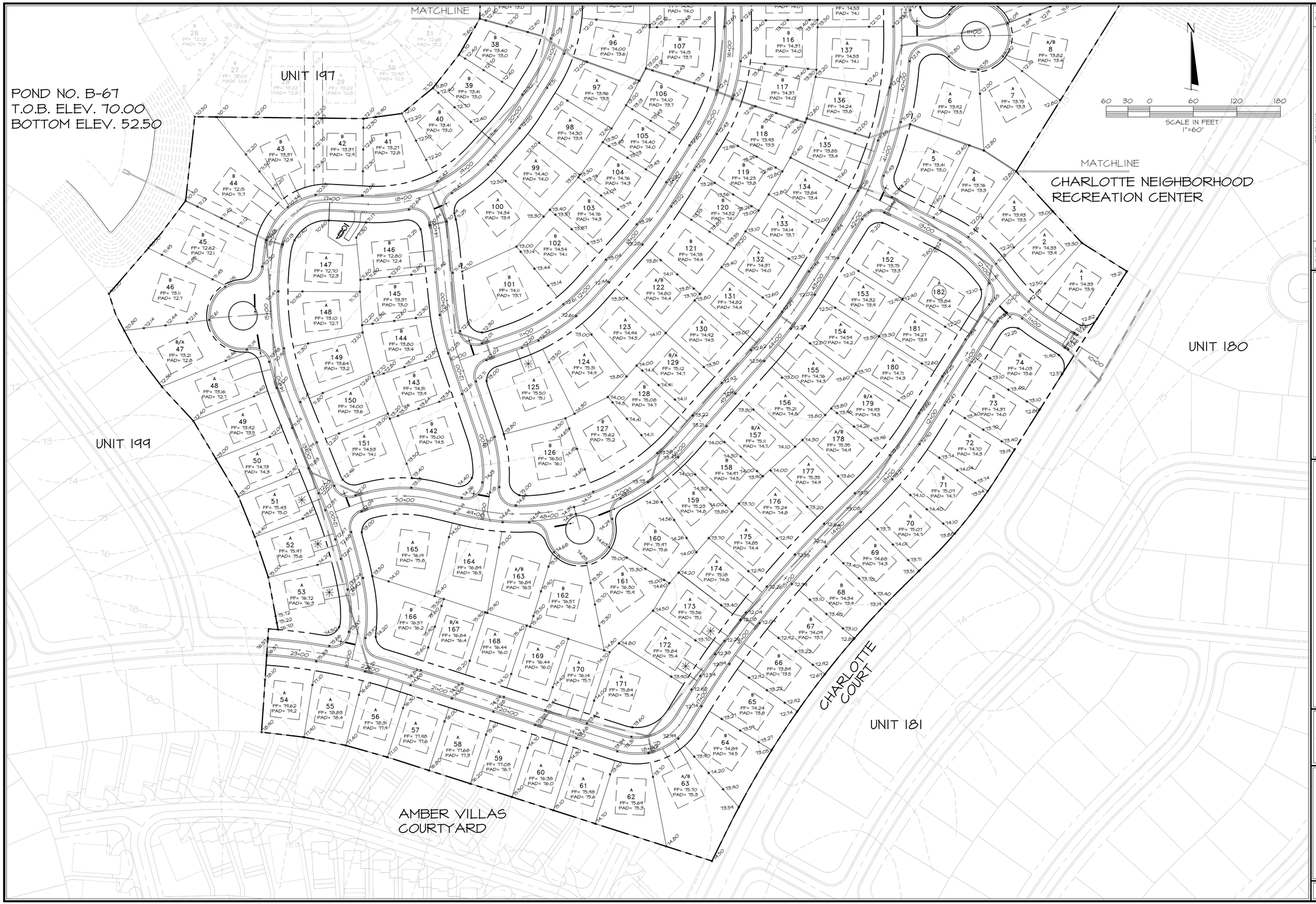

DATE	REVISIONS	BY

FARNER BARLEY AND ASSOCIATES, INC.
▲ ENGINEERS ▲ SURVEYORS ▲ PLANNERS
Certificate of Authorization Number: 4709
4450 N.E. 83rd Road o Wildwood, Florida 34785 o (352) 748-3126

The Villages®

VILLAGES OF SUMTER
UNIT 146

MASTER GRADING PLAN

DATE 6-26-10
DRAWN BY MJC
CHKD BY DC/JAH
FILE NAME 146 GRADE1D146
JOB NO. 921141.1985

SHT. 19 OF 19

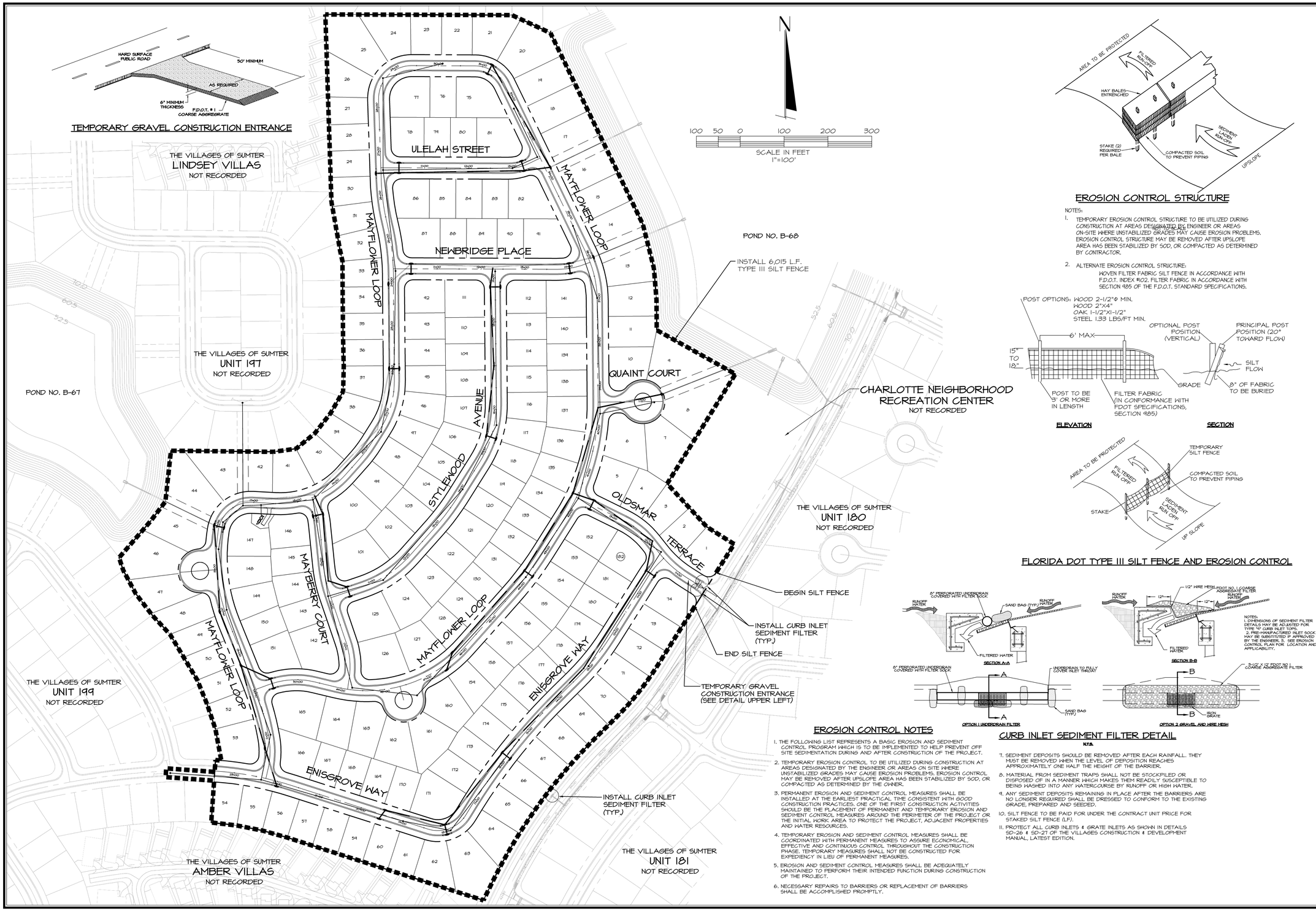

EROSION CONTROL NOTES

1. THE FOLLOWING LIST REPRESENTS A BASIC EROSION AND SEDIMENT CONTROL PROGRAM WHICH IS TO BE IMPLEMENTED TO HELP PREVENT OFF SITE SEDIMENTATION DURING AND AFTER CONSTRUCTION OF THE PROJECT.
2. TEMPORARY EROSION CONTROL TO BE UTILIZED DURING CONSTRUCTION AT AREAS DESIGNATED BY THE ENGINEER OR AREAS ON SITE WHERE UNSTABILIZED GRADES MAY CAUSE EROSION PROBLEMS. EROSION CONTROL MAY BE REMOVED AFTER UPSLOPE AREA HAS BEEN STABILIZED BY SOD, OR COMPACTED AS DETERMINED BY THE OWNER.
3. PERMANENT EROSION AND SEDIMENT CONTROL MEASURES SHALL BE INSTALLED AT THE EARLIEST PRACTICAL TIME CONSISTENT WITH GOOD CONSTRUCTION PRACTICES. ONE OF THE FIRST CONSTRUCTION ACTIVITIES SHOULD BE THE PLACEMENT OF PERMANENT AND TEMPORARY EROSION AND SEDIMENT CONTROL MEASURES AROUND THE PERIMETER OF THE PROJECT OR THE INITIAL WORK AREA TO PROTECT THE PROJECT, ADJACENT PROPERTIES AND WATER RESOURCES.
4. TEMPORARY EROSION AND SEDIMENT CONTROL MEASURES SHALL BE COORDINATED WITH PERMANENT MEASURES TO ASSURE ECONOMICAL, EFFECTIVE AND CONTINUOUS CONTROL THROUGHOUT THE CONSTRUCTION PHASE. TEMPORARY MEASURES SHALL NOT BE CONSTRUCTED FOR EXPEDIENCY IN LIEU OF PERMANENT MEASURES.
5. EROSION AND SEDIMENT CONTROL MEASURES SHALL BE ADEQUATELY MAINTAINED TO PERFORM THEIR INTENDED FUNCTION DURING CONSTRUCTION OF THE PROJECT.
6. NECESSARY REPAIRS TO BARRIERS OR REPLACEMENT OF BARRIERS SHALL BE ACCOMPLISHED PROMPTLY.

CURB INLET SEDIMENT FILTER DETAIL

N.T.S.

7. SEDIMENT DEPOSITS SHOULD BE REMOVED AFTER EACH RAINFALL. THEY MUST BE REMOVED WHEN THE LEVEL OF DEPOSITION REACHES APPROXIMATELY ONE HALF THE HEIGHT OF THE BARRIER.
8. MATERIAL FROM SEDIMENT TRAPS SHALL NOT BE STOCKPILED OR DISPOSED OF IN A MANNER WHICH MAKES THEM READILY SUSCEPTIBLE TO BEING WASHED INTO ANY WATERCOURSE BY RUNOFF OR HIGH WATER.
9. ANY SEDIMENT DEPOSITS REMAINING IN PLACE AFTER THE BARRIERS ARE NO LONGER REQUIRED SHALL BE DRESSED TO CONFORM TO THE EXISTING GRADE, PREPARED AND SEEDED.
10. SILT FENCE TO BE PAID FOR UNDER THE CONTRACT UNIT PRICE FOR STAKED SILT FENCE (LF).
11. PROTECT ALL CURB INLETS & GRATE INLETS AS SHOWN IN DETAILS SD-26 & SD-27 OF THE VILLAGES CONSTRUCTION & DEVELOPMENT MANUAL, LATEST EDITION.

DATE	REVISIONS	BY

FARNER BARLEY
ENGINEERS ▲ SURVEYORS ▲ PLANNERS
AND ASSOCIATES, INC.
Certificate of Authorization Number: 4709
4450 N.E. 83rd Road ○ Wildwood, Florida 34785 ○ (352) 748-3128

The Villages

VILLAGES OF SUMTER
UNIT 178

EROSION CONTROL MASTER PLAN

DATE 7-13-10
DRAWN BY MJG
CHKD BY JAH
FILE NAME EC-HB-B05
JOB NO. 921141.1923

SHT. EC OF EC

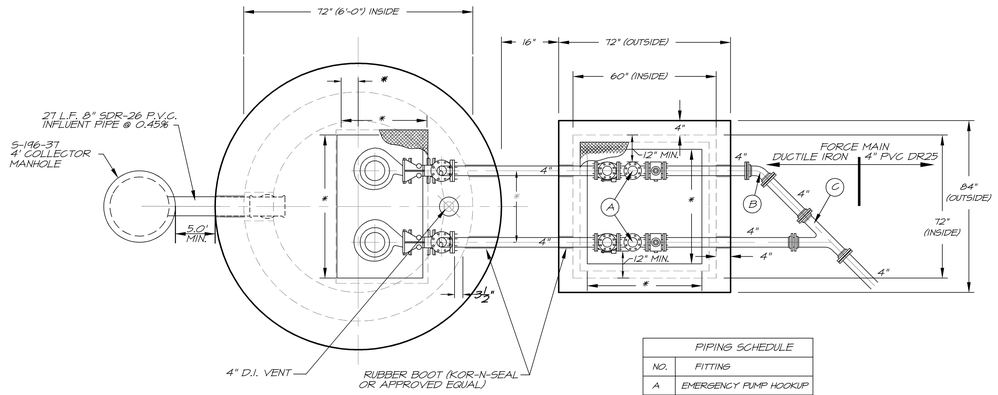

* TO BE DETERMINED BY PUMP MANUFACTURER

PIPING SCHEDULE	
NO.	FITTING
A	EMERGENCY PUMP HOOKUP
B	4" 45° M.J. BEND
C	4"x4" M.J. WYE

PLAN VIEW
NOT TO SCALE

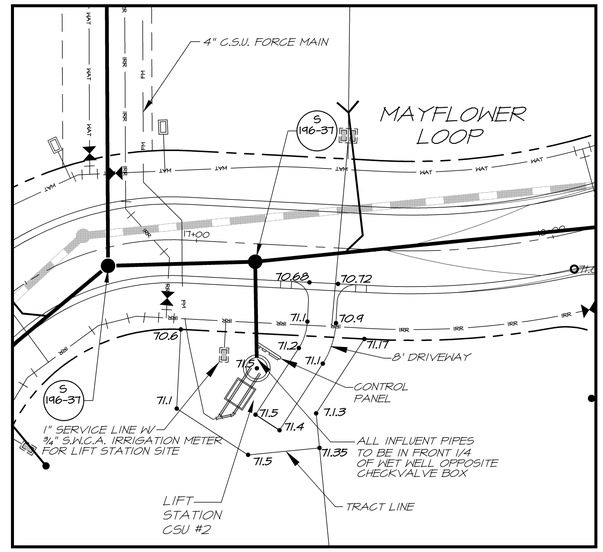

SITE PLAN
SCALE : 1"=20'

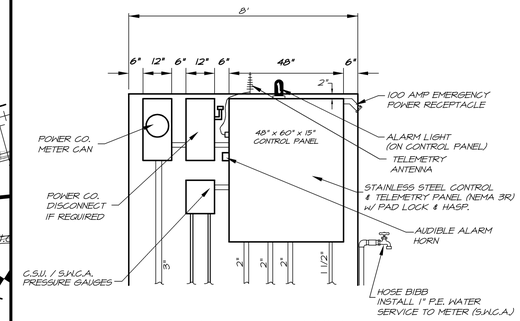

CONTROL PANEL
FRONT VIEW
VERIFY DIMENSIONS PRIOR TO CONSTRUCTION OF WALL

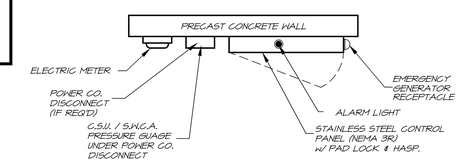

CONTROL PANEL
PLAN VIEW
NOT TO SCALE

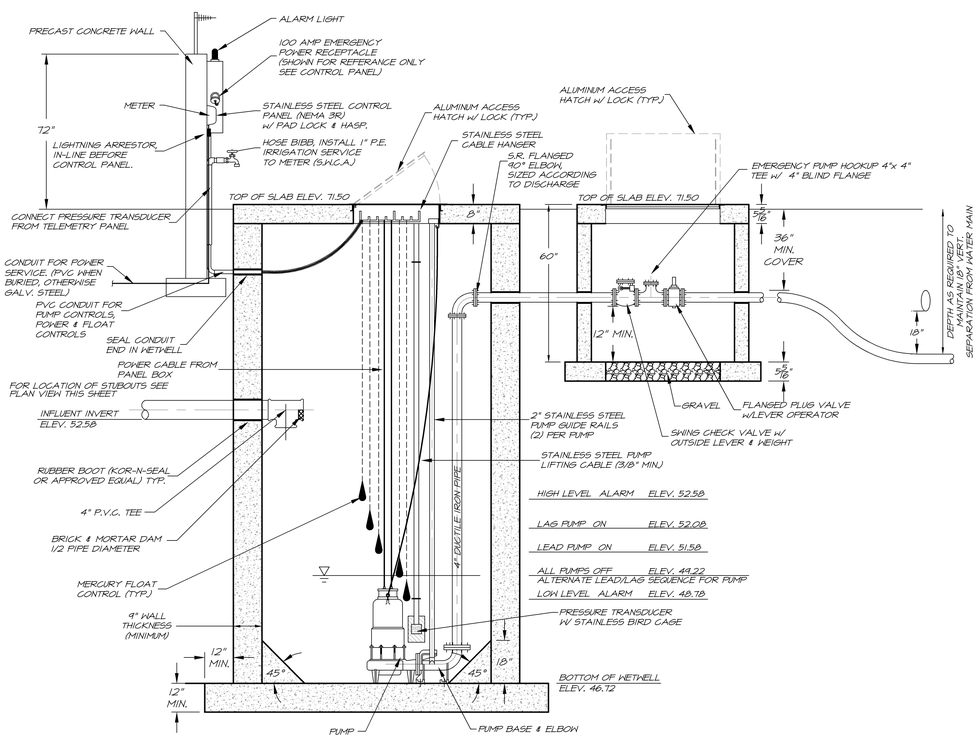

ELEVATION
NOT TO SCALE

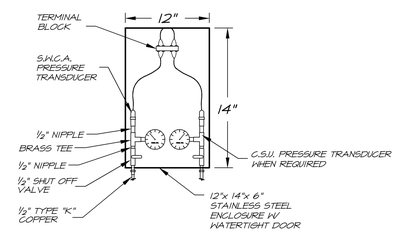

PRESSURE GAUGE PANEL

Pump Manufacturer:	HYDROMATIC
Pump Model No.:	HYQ / HYQX
GPM 407 @	84.5 TDH
Impeller Size:	9"
RPM	1750
Horsepower: 25	Voltage: 460
Phase: 3	Valve Size: 4"
Piping Diameter:	4"

PUMP DATA

EQUIPMENT AND CONSTRUCTION NOTES:

1. WET WELL SHALL BE PRECAST CONCRETE MEETING "STANDARD SPECIFICATIONS FOR PRECAST REINFORCED CONCRETE MANHOLE", A.S.T.M. C-478, LATEST REVISION. CONCRETE SHALL BE MADE WITH TYPE II ACID RESISTANT CEMENT AND SHALL ATTAIN A COMPRESSIVE STRENSTH OF 4000 P.S.I. AT 28 DAYS. JOINTS SHALL BE SEALED WITH RAM-NEK OR EQUAL FLEXIBLE SEALER CONFORMING TO FEDERAL SPECIFICATION SS-S-00210. INSIDE AND OUTSIDE OF WET WELL SHALL BE PAINTED WITH TWO COATS OF "POXITAR" OR EQUAL APPLIED PER MANIFACTURES RECOMMENDATIONS. STEEL PLACED IN BOTTOM SLAB IS TO BE IDENTICAL TO THE TOP SLAB EXCEPT THAT DIAGONAL BARS AND OPENINGS ARE ELIMINATED. STEEL IS CONTINUOUS AND SLAB IS SOLID. FABRICATOR SHALL BE RESPONSIBLE FOR STRUCTURAL DESIGN OF WALLS, TOP SLABS, BOTTOM SLABS AND BUOYANCY CALCULATIONS FOR THE WETWELL, VALVE BOX, AND CONCRETE CONTROL PANEL WALL.
2. PUMPS SHALL BE HYDROMATIC SUBMERSIBLE. PUMPS SHALL HAVE (2) 2" STAINLESS STEEL GUIDE RAILS PER PUMP AND A BPI FRONT DUPLEX RAIL SYSTEM OR EQUAL
3. PRIMARY LEVEL CONTROL SHALL BE A SUBMERSIBLE PRESSURE SENSING TYPE LEVEL INDICATING TRANSDUCER EQUAL TO A "BLUE RIBBON INDUSTRIAL BIRDCAGE". THIS TRANSDUCER SHALL BE SUPPLIED AND INSTALLED IN ACCORDANCE WITH THESE DRAWINGS AND THE VILLAGES CONSTRUCTION AND DEVELOPMENT MANUAL, LATEST EDITION.
   BACK UP LEVEL CONTROLS SHALL BE MODEL 3900 MERCURY SWITCH LIQUID LEVEL REGULATORS EACH PROVIDED WITH 50' CONTINUOUS ELECTRIC CABLE AND HEIGHTS AS MANIFACTURED BY HYDROMATIC OR EQUAL.
4. WET WELL ACCESS COVER SHALL HAVE CLEAR OPENING, PER PUMP MANIFACTURER'S RECOMMENDATION, AS MANUFACTURED BY HALLIDAY PRODUCTS OR EQUAL. ACCESS FRAME AND COVERS SHALL BE FABRICATED OF ALUMINUM TO WITHSTAND A LIVE LOAD OF 300 P.S.I. FRAME SHALL SUPPORT GUIDE RAILS AND CABLE HOLDER FOR ELECTRICAL WIRING. CABLE HOLDER SHALL BE CONSTRUCTED OF STAINLESS STEEL. COVERS SHALL BE PROVIDED WITH LIFTING HANDLE AND SAFETY LATCH TO HOLD COVER IN OPEN POSITION. LOCKING HASPS SHALL BE FURNISHED FOR EACH COVER. STAINLESS STEEL HARDWARE SHALL BE USED THROUGHOUT. ALL SURFACES IN CONTACT WITH CONCRETE SHALL HAVE A SHOP COAT OF ZINC CHROMATIC PRIMER, APPROVED ALKALI RESISTANT PAINT OR OTHER APPROVED PROTECTIVE COATING. COVER MUST BE COMPATIBLE WITH PUMPS.
5. VALVE VAULT ACCESS COVER SHALL HAVE CLEAR OPENING, PER PUMP MANUFACTURER'S RECOMMENDATIONS, AS MANUFACTURED BY HALLIDAY PRODUCTS OR EQUAL. DOOR LEAF SHALL BE 1/4" ALUMINUM DIAMOND PATTERN PLATE. TO WITHSTAND A LIVE LOAD OF 300 P.S.I. CHANNEL FRAME SHALL BE 1/4" ALUMINUM WITH ANCHOR FLANGE AROUND THE PERIMETER. COVER SHALL BE PROVIDED WITH LIFTING HANDLE AND SAFETY LATCH TO HOLD COVER IN OPEN POSITION. A LOCKING HASP SHALL BE FURNISHED FOR EACH COVER. STAINLESS STEEL HARDWARE WILL BE USED THROUGHOUT. ALL SURFACES IN CONTACT WITH CONCRETE SHALL HAVE A SHOP COAT OF ZINC CHROMATIC PRIMER, APPROVED ALKALI RESISTANT PAINT OR OTHER APPROVED PROTECTIVE COATING.
6. ELECTRICAL SERVICE ENTRANCE, PROVIDE METER SOCKET AND MAIN DISCONNECT MEETING APPLICABLE ELECTRIC CODES AND REQUIREMENTS OF POWER COMPANY. LIGHTNING AND VOLTAGE SURGE PROTECTION TO BE PROVIDED. CONTRACTOR TO CONFIRM SERVICE ARRANGEMENTS WITH POWER COMPANY BEFORE COMMENCING WORK. CONTRACTOR TO RUN UNDERGROUND WIRING TO NEAREST TRANSFORMER OR HAND HOLE.
7. CONTROL PANEL SHALL BE EQUIPPED WITH ACROSS THE LINE MAGNETIC STARTERS, THREE POLE OVERLOAD PROTECTION, OVERLOAD RESETS, H.O.A. PUMP OPERATING SELECTOR SWITCH, PUMP SEAL FAILURE LIGHTS, ELAPSED TIME METERS FOR EACH PUMP, TERMINAL BOARD WITH CONNECTIONS FOR HIGH LEVEL ALARMS. ALL COMPONENTS SHALL BE HOUSED IN A NEMA 3R STAINLESS STEEL ENCLOSURE WITH ALUMINUM DEAD FRONT INNER DOOR DESIGN. PROVISIONS FOR PADLOCKING PANEL SHALL BE PROVIDED. ALL EXPOSED AND EMBEDDED CONDUITS TO BE SCHEDULE 40 P.V.C.
8. ALL FASTENERS ON FLANGES AND ETC. INSIDE WET WELL AND VALVE VAULT WILL BE STAINLESS STEEL. ALL PIPING SHALL BE DUCTILE IRON.
9. CHECK VALVES SHALL BE MUELLER, KENNEDY, CLOW OR M. AND H. WITH OUTSIDE LEVER AND WEIGHT. PLUG VALVES SHALL BE SERIES 100, AS MANIFACTURED BY DEZURIK CORP. OR APPROVED EQUAL. VALVES SHALL BE CONSTRUCTED WITH RESILIENT FACED PLUGS.
10. SHOP DRAWINGS OF ENTIRE INSTALLATION MUST BE APPROVED BY ENGINEER PRIOR TO PLACEMENT OF ORDER.
11. LEAD PUMP ON & LAG PUMP ON SETTINGS TO BE VARIED BY THE UTILITY COMPANY DURING INITIAL OPERATING CONDITIONS SO THAT THE PUMP CYCLING TIME WILL BE NO LONGER THAN 15 MINUTES TO PREVENT SEPTIC CONDITIONS AT THE WETWELL.
12. THE ELEVATIONS SHOWN FOR LEAD PUMP ON & LAG PUMP ON ARE FOR THE TOTAL PROJECT BUILDOUT.

DATE	REVISIONS	BY

FARNER BARLEY AND ASSOCIATES, INC.
▲ ENGINEERS ▲ SURVEYORS ▲ PLANNERS
Certificate of Authorization Number: 4709
4450 N.E. 83rd Road ○ Wildwood, Florida 34785 ○ (352) 748-3126

The Villages®

VILLAGES OF SUMTER
UNIT 196

LIFT STATION C.S.U. # 2
DETAILS

DATE 10-06-10
DRAWN BY M.K
CHKD BY WLC
FILE NAME LS196
JOB NO. 921141.1985

SHT. LS-1 OF LS-1